ewo

Since 1914

Compressed Air Catalog

- Compressed Air Conditioning
- Flow Meter
- Compressed Air Accessories
- Garage Equipment

ООО "ПРОВЕРТ" www.prowert.ru info@prowert.ru +7 (495) 108-05-38

We are compressed air and autogenous machines.

Innovation as a tradition.

Welcome to ewo – We are glad to see that you are interested in our product line and our company ewo as synonymous for reliable products in the sector of compressed-air-powered and autogenous devices. A trademark for quality. Numerous applications for industrial operations, craft producers, filling stations, rescue and relief agencies, health-care operations etc. document in an exemplary fashion the performance and professionalism displayed in our products. Our responsible approach to conserving our earth's resources is evidenced in the long and trouble-free useful life of our products. We will continue to live up to this responsibility in the future.

ewo is a family-managed company with a proud history – which is also looking optimistically to the future. After all, we have numerous plans; we seek to further advance the ongoing process of internationalisation and keep the company on its path to constant growth. Also in this process, we do not forget our roots our employees at our Stuttgart headquarters and you, our customers from around the world. We owe everything to you hundreds of innovations and thousand of products emerged from this co-operation marked by mutual trust.

This success is no matter of chance, but rather the result of continuous hard work. In research and design, in quality assurance and customer service. That is to say, in every area where ideas become innovations and capture world markets. For nearly 100 years. We will continue to live up to this obligation, and would be glad to see you accompany us

This is what we believe in.

Tradition meets innovation – that is ewo. We stand for quality and reliability. Not merely when it comes to our products also in our co-operation with customers, partners, suppliers and employees. For many generations, we have consciously maintained our ties to this region – and our capacity to offer locally-based services around the world.

ООО "ПРОВЕРТ" www.prowert.ru info@prowert.ru +7 (495) 108-05-38

ewo

761 04/2015

1 General Information

2 Compressed Air Preparation – vma

3 Compressed Air Preparation – standard

4 Compressed Air Preparation – variobloc

5 Compressed Air Preparation – combibloc

6 Compressed Air Preparation – airvision

7 Compressed Air Preparation – Stainless Steel

8 Compressed Air Preparation – Drain Valves

9 Flow Meter

10 Compressed Air Accessories I
Couplings, Threaded Connections

11 Compressed Air Accessories II
Hoses, Valves, Mufflers, Gauges, Accessories

12 Garage Equipment

ООО "ПРОВЕРТ" www.prowert.ru info@prowert.ru +7 (495) 108-05-38

Representatives around the world

AUSTRALIA

Ultramax
P.O. Box 255 Maddington
WESTERN AUSTRALIA 6989

phone: +61 8 9458 4477
fax: +61 8 9458 4470
email: greg@ultramax.net.au
internet: www.ultramax.net.au

All products

BULGARIA

BASVULK Ltd.
86, Tsar Osvoboditel St.
2500 KYUSTENDIL

phone: +359 78551204
fax: +359 78526101
mobile: +359 888700816
email: basvulk@abv.bg
internet: www.basvulk.com

Garage equipment

BULGARIA

AIG Welding Ltd.
Kompl. “Sveta Troitza” “Zaichar”
Str. bl.332 ent.B, fl, ap37
1309 SOFIA

phone: +359 2 218818
email: aigwelding@dir.bg

Gas welding and cutting equipment

CANADA

Island Automation Inc.
14 Industrial Rd.
St. Marys
ONTARIO N4X 1B5

phone: +5192841885
fax: +5192840765
email: dean@islandautomation.ca
internet: www.islandautomation.ca

All products

CHINA

EWO Compressed Air Technology Co., Ltd.
Helen Hu
No.3 Jinma Road, Maqun Science Park
210049 NANJING P.R.China

phone: +86 (0)25 85720128
mobile: +86 (0)15996286014
email: helen.hu@ewo-stuttgart.com
internet: www.ewo-stuttgart.cn

All products

CHINA

BACO Int. Trade Company
54 Wuwei Road, DEDA
300300 TIANJIN

phone: +86 222 4982490
email: xmyang@baco.com.cn
internet: www.baco.com.cn

All products

CHINA

Shanghai Yidao Technology co., Ltd
Add: 1st floor, No7 building,
Lane 1165. Jindu Rd.
SHANGHAI CHINA

phone: +86 (21) 60738818
fax: +86 (21) 60738819
email: johnxu@shyidao.com
internet: www.shyidao.com

Gas welding and cutting equipment

COSTA RICA

Facility & Supply S.A.
Esteban Rodriguez Barahona
Apdo 130-4300
CR-0 Palmares-Alajuela

phone: +506 2453-5000
fax: +506 2453-2992
email: proveedor@facility.cr
internet: www.facility.cr

All products

CROATIA

Metron Instruments
P.C. Zavrtnica
Zavrtnica 17
10000 ZAGREB

phone: +385 1 6185 687
fax: +385 1 6185 323
email: bruno.cipic@metron-instruments.com

Compressed air equipment
Gas welding and cutting equipment

CYPRUS

T.E. Kyriacos Antoniou & Sons Ltd
31, Vasileos Pavlou Str.
3052 LIMASSOL

phone: +357 25 573255
fax: +357 25 564767
email: tek_antoniou@cytanet.com.cy
internet: www.tekantoniou.com

Compressed air equipment

CZECH REPUBLIC

ewo Czech Republic
Jan Chlupsa
Kosor
Korejsi 205
25226 PRAHA

phone: +420 60 8529380
email: jan.chlupsa@ewo-stuttgart.com
internet: www.ewo-stuttgart.com

All products

DENMARK

JETAS A/S
Syrevej 55A
3300 FREDERIKSVAERK

phone: +45 7022 6340
fax: +45 7022 7340
email: jetas@jetas.dk
internet: www.jetas.dk

All products

ООО "ПРОВЕРТ" www.prowert.ru info@prowert.ru +7 (495) 108-05-38

EGYPT

Gama Trading & Engineering
Nasr City - 23 Omarat Elobour - Salah Salem
CAIRO

phone: +20 (2) 2404572
fax: +20 (2) 24040582
email: gafeelenpy@yahoo.com

Compressed air equipment

FINLAND

Mopla Oy
Kotkankatu 4
00510 HELSINKI

phone: +358 9 148 4900
fax: +358 9 148 4900
email: info@mopla.fi
internet: www.mopla.fi

Garage equipment

FRANCE

ewo France
Fredy Künzi
Pistoule 21
CH 2036 Cormondrèche

phone: +41 79 7605704
email: fredy.kuenzi@ewo-stuttgart.com
internet: www.ewo-stuttgart.com

All products

GREECE

Athens-Hydrodynamic S.A.
54-56 Athinon Ave
10441 ATHENS

phone: +30 1 522 1155
fax: +30 1 522 1485
email: hydrodyn@otenet.gr

Compressed air equipment

GREECE

G.H. Carayanopoulous & Sons S.A.
17, Marni Street
10443 ATHENS

phone: +30 1 522 5749
fax: +30 1 523 0939

Garage equipment

ICELAND

Skulason + Johnsson HF
Skutuvogi 12
P.O. Box 4143
104 REYKJAVIK

phone: +354 568 6544
fax: +354 553 0543
email: s-j@isholf.is

Compressed air equipment

INDIA

Spektrum Fluid Power Pvt. Ltd.
Building F3, Flat No. 9
State Bank Nagar Co-op
Paud Rd, Kothrud
PUNE 411038

phone: +91 20 65606810
fax: +91 20 25381532
email: info@spektrum-fp.com
internet: www.spektrum-fp.com
All products

INDONESIA

PT. LIENETIC JAYA
Jln.Tanjung Duren Timur IV No. 15B
JAKARTA BARAT 11470

phone: +62 21 93389060
fax: +62 21 567 1816
email: lieneticjaya@cbn.net.id

All products

IRAN

Sherhate Tolid Madare Pneumatic + Hydraulik Badran
139 Forsate Shirazi St - North Nawab Ave
TEHRAN 14197

phone: +98 21 6692 2170
fax: +98 21 6692 9040
email: info@badranpneumatic.com
internet: www.badranpneumatic.com

Compressed air equipment (franchise)

IRELAND

Pneumatics LTD.
Old Naas Road, Bluebell
DUBLIN 12

phone: +353 1 456 8111
fax: +353 1 456 8108
email: sales@pneumatics.ie
internet: www.pneumatics.ie

Compressed air equipment

ITALY

Società Italiana Commerciale Utensili s.p.a. SICUTOOL
Via Cesena, 15
20155 MILANO

phone: +39 02 345761
fax: +39 02 3314503
email: sicutool@sicutool.it
internet: www.sicutool.it

All products

JAPAN

Taiyo International Corporation
Shirokanedai Kowa Bldg.
Shirokanedai 2-9-6, Minato-ku
TOKYO 108-0071

phone: +81 3 5791 2511
fax: +81 3 3280 5411
email: mail@tic-tokyo.co.jp
internet: www.tic-tokyo.co.jp

All products

ООО "ПРОВЕРТ" www.prowert.ru info@prowert.ru +7 (495) 108-05-38

Representatives around the world

KOREA (South)

U-Chang International Ltd.
Bld. # 19-25, Industrial Circulation Center
Sangyuk-2 Dong, Buk-Gu
DAEGU 702-012

phone: +82 53 604 1699
fax: +82 53 604 1297
email: jsanco@unitel.co.kr
internet: www.ucikorea.co.kr

All products

LATVIA

SIA Alintek
Krasta iela 103
LV-1019 RIGA

phone: +371 67250002
email: janis@alintek.lv
internet: www.alintek.lv

All products

MALAYSIA

SK-TEC Automation & Engineering
No.54-A, Taman Puchong Utama,
Jalan PU 7/3
47100 PUCHONG, SELANGOR

phone: +603 80608771
fax: +603 80608772
email: jeffery.koo@sk-tec.com.my
internet: www.sk-tec.com.my

All products

MEXICO

Fluid Power, S.A. de C.V.
Nestor Chavez

phone: +52 722 5230-079
+52 55 5572-2978
email: nchavez@fluidpower.com.mx
internet: www.fluidpower.com.mx

All products

NETHERLANDS

Bönnekamp b.v.
Maarnse Grindweg 12d
3951 LK MAARN

phone: +31 343 416 944
fax: +31 343 416 756
email: drive@bonnekamp.nl
internet: www.bonnekamp.nl

All products

PERU

Ing. E. Brammertz S.R.L.
Apardo Postal 0173 Miraflores
Lima 18 - Perú

phone: +511 445 0181
fax: +511 445 1931
email: ventas1@brammertz.com
internet: www.brammertz.com

All products

POLAND

PTH Pneumatic Complex
Osojca J.I.P Spolka jawna
al. IX Wieków Kielc 16/13
25-516 KIELCE

phone: +48 41 3431164
fax: +48 41 3431165
email: pneumatic@pneumatic-complex.com.pl
internet: www.pneumatic-complex.com.pl

Compressed air equipment

POLAND

Tubes International Sp. z o.o.
Hoses and Fittings for Industry
ul. Bystra 15A
61-366 POZNAN

phone: +48 61 65302 22
fax: +48 61 65302 20
email: tubes@tubes-international.com
internet: www.tubes-international.com

Garage equipment

QATAR

MECHATRONICS INDUSTRIAL EQUIPMENT
P.O. Box: 39233
Salwa Rd
Doha Quatar

phone: +974 4458 1155
fax: +974 4468 9135
email: mechatronics@quatar.net.qa
internet: www.mechatronics.ae

Compressed air equipment

SINGAPORE

BK Pneumatics & Controls
No.1 Joo Koon Cresent, 4th Level,
Yeow Heng Ind. Bldg.
SINGAPORE 629027

phone: +65 6861 0757
fax: +65 6861 0756
email: bkpneu@singnet.com.sg

All products

SLOVAKIA

ewo Slovak Republic
Jan Chlupsa
Kosor
Korejsi 205
25226 PRAHA

phone: +420 60 8529380
email: jan.chlupsa@ewo-stuttgart.com
internet: www.ewo-stuttgart.com

All products

SLOVENIA

OMEGA AIR d.o.o. Ljubljana
Cesta Dolomitskega odreda 10
1000 LJUBLJANA

phone: +386 1 200 68 81
fax: +386 1 200 68 51
email: ladislav.pecnik@omega-air.si
internet: www.omega-air.si

Compressed air equipment

ООО "ПРОВЕРТ" www.prowert.ru info@prowert.ru +7 (495) 108-05-38

SOUTH AFRICA SA

ewo SOUTH AFRICA (PTY) LTD
26 6th Avenue Edenvale, 1609
Postnet Suite 12
Private Bag x10016
EDENVALE 1610

phone: +27 11 453-5891
fax: +27 11 453-8608
email: peter.tolmay@ewo-sa.com
internet: www.ewo-stuttgart.com

All products

SPAIN

Delfin Traver S.L.
Antigua N-340
Poligono Industrial Pullman
12006 CASTELLON

phone: +34 964 210674
fax: +34 964 204255
email: delfin@delfintraver.com
internet: www.delfintraver.com

All products

SPAIN

Seicom S.L.
c/o Joan Banti Visa
C/ Modolell nº 39
08021 BARCELONA

phone: +34 93 241 15 66
fax: +34 93 414 61 99
email: commercial@seicomsl.es
internet: www.seicomsl.es

Compressed air equipment

SWEDEN

Scandor Agentur AB
Ekbacksvägen 40
S-182 38 DANDERYD

phone: +46 8 755 52 00
mobile: +46 70 535 63 22
email: info@scandor.se
internet: www.scandor.se

All products

TAIWAN

Autotech Industries Inc.
Vincent Chen
P.O. Box 1066
7F, 351 His men road, Sec. 2
TAINAN

phone: +886 6 220 3422
email: techart@ms31.hinet.net

All products

TAIWAN

DETER ENTERPRISE CO. LTD
No. 1, Lane 90
Ta Ya Rd
TAICHUNG/TAIWAN R.O.C.

phone: +886 4 201 92 18
fax: +886 4 201 85 54
email: deter218@ms27.hinet.net
internet: www.deter.com.tw

All products

THAILAND

KULTHORN Group
237 Larn Luang Road, Pomprab
BANGKOK 10100

phone: +66 282 21 51
fax: +66 280 14 44
email: kulthorn@kulthorn.com
internet: www.kulthorn.com

Compressed air equipment

UNITED ARAB EMIRATES

FLOWLINES Technology L.L.C.
P.O. Box: 47559
DUBAI

phone: +971 4 267 6286
email: flowline@emirates.net.ae
internet: www.mechatronics.ae

Compressed air equipment

UNITED ARAB EMIRATES

Middle East International Enterprises
P.O. Box No. 484
SHARJAH/U.A.E.

phone: +971 6 335 533
fax: +971 6 335 566
internet: http://www.memealhajeri.com

Garage equipment

UNITED KINGDOM

Newbow Aerospace Ltd.
Meir Road
Park Farm North
REDDITCH B98 7SY

phone: +44 1527 518 100
fax: +44 1527 518 300
email: sales@newbowaerospace.com
internet: www.newbowaerospace.com

Garage equipment

UNITED KINGDOM

The West Group Ltd.
Aston Road
Waterlooville
HAMPSHIRE PO7 7XJ

phone: +44 2392 266031
fax: +44 2392 240323
email: sales@westgroup.co.uk
internet: www.westgroup.co.uk

Compressed air equipment

UNITED STATES OF AMERICA

Island Automation Inc.
14 Industrial Rd.
St. Marys
ONTARIO N4X 1B5 (CANADA)

phone: +519 284 1885
fax: +519 284 0765
email: dean@islandautomation.ca
internet: www.islandautomation.ca

All products

ООО "ПРОВЕРТ" www.prowert.ru info@prowert.ru +7 (495) 108-05-38

Representatives around the world

VIETNAM

CAT MINH Industrial Hardware Co. Ltd.
137 Le Quang Dinh St.
Ward 14, Binh Thanh District
HO CHI MINH CITY

phone: +84 8 62583341
fax: +84 8 62583348
email: catminh@catminh.net
internet: www.catminh.com

Compressed air equipment

ООО "ПРОВЕРТ" www.prowert.ru info@prowert.ru +7 (495) 108-05-38

Director Sales

Oliver Reinl
Phone +49 711 7813-140
oliver.reinl@ewo-stuttgart.com

Business Development Manager International

Achim Rausch
Phone +49 711 7813-120
achim.rausch@ewo-stuttgart.com

Sales Administration, Order and Processing

Stefan Engler
Phone +49 711 7813-125
stefan.engler@ewo-stuttgart.com

Export & International Delivery

Phone +49 711 7813-122
delivery@ewo-stuttgart.com

Fax +49 711 7813-200 – +49 711 7813-139

Woldwide ewo Sales Offices

ewo China

Helen Hu
helen.hu@ewo-stuttgart.com

ewo Czech Republik and Slovakia

Jan Chlupsa
jan.chlupsa@ewo-stuttgart.com

ewo South Africa

Peter Tolmay
peter.tolmay@ewo-sa.com

ewo Switzerland

Fredy Künzi
fredy.kuenzi@ewo-stuttgart.com

www.ewo-stuttgart.com – sales@ewo-stuttgart.com

ООО "ПРОВЕРТ" www.prowert.ru info@prowert.ru +7 (495) 108-05-38

Chapter guide

Chapter 2

Compressed Air Preparation – vma

A filter system for compressed air of the highest purity.
Different filter stages – preliminary filter, microfilter and activated charcoal filter. Modular system for direct flanging. Six sizes with connecting threads from G 1/4 to G 2.

Chapter 3

Compressed Air Preparation – standard

Air preparation equipment in classical design and of proven quality.
Filters, special filters, pressure regulators, fog lubricators, filter pressure regulators and combination maintenance units with many variations in filter fineness, drain valves, pressure ranges or bowls. Connection to maintenance units by means of double nipples. Six sizes with connecting threads G 1/8 to G 2, up to max. 60 bar. Air treatment equipment of the standard series, which can not be used for maintenance units.
Filter and micro-filter 40 bar and 60 bar, small pressure regulator, pressure regulator with brass casings, pressure regulator 60 bar, pressure line regulator, precision pressure regulator, with pressure gauge in hand wheel, water pressure regulator, small lubricator.

Chapter 4

Compressed Air Preparation – variobloc

Our new, innovative modular series “variobloc” fulfils the standards of modern and high-capacity systems at the same time with optimal handling characteristics on a high quality level. The complete modular construction system cares for multifaceted possibilities of combination and makes it easy to adapt the components individually and quickly to modified operating conditions. Especially industrial pneumatic applications profit by the recognisable positive product characteristics. Connecting threads G 1/4 to G 1.

Chapter 5

Compressed Air Preparation – combibloc

Combination maintenance units in modular design comprising a filter, pressure-regulator and a fog lubricator all together in a extremely space - saving construction with many variations. Connecting threads G 1/4 to G 1.

Chapter 6

Compressed Air Preparation – airvision / airvision L

Air preparation equipment in economy construction with modern modular design, offering various combinations and attractive prices.
Filters, fine filters, pressure regulators, fog lubricators and filter pressure regulators, additionally with distributors, ball valves with relieving, starting valves and magnetic valves. Connection to maintenance units by flanging with insert and sealing ring. Connecting threads G 1/8 to G 1/4.

ООО "ПРОВЕРТ" www.prowert.ru info@prowert.ru +7 (495) 108-05-38

Chapter 7

Compressed Air Preparation – Stainless Steel

Treatment equipment completely in stainless steel and extremely robust, high resistance against corrosion.
Filter, filter regulator, pressure regulator, lubricator, FRL, threaded pipe and valves. Connection G 1/8 to G 1 – Fittings and valves in part to G 2.

Chapter 8

Compressed Air Preparation – Drain Valves

Drain valves serve to remove compressed air condensate from filters and filter pressure regulators on the equipment of all ewo series in all sizes. Manual drain valves are fitted on our filters as standard equipment. Other types of drain valves (semi-automatic drain valves, fully automatic externally fitted drain valves A or B, fully automatic internally fitted drain valves, timer controlled or electronic drain valves and external drain valve at 20 bar) can be mounted as an option.

Chapter 9

Flow Meter

Flow meter for compressed air and gases for use in compressed air balancing, compressed air consumption measurement, leaking air / leak rate determination, mobile compressed air measurement in front of single machines / plants, flow measurement of process gases and nitrogen generators.

Chapter 10

Compressed Air Accessories I

Couplings, Threaded Connections

Fittings for compressed air distribution, such as couplings, hose connections, high speed connections, rapid-action screw-fittings for plastic hoses.

Chapter 11

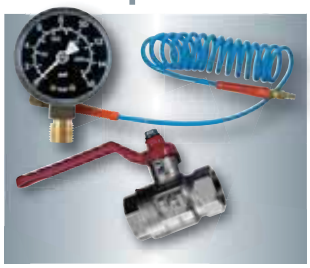

Compressed Air Accessories II

Hoses, Valves, Mufflers, Gauges, Accessories

Other Accessories for compressed air distribution: Directional control valves as shut-off valves, ball valves, manual slide valves, non-return valves, blow-off valves and safety valves, hoses, mufflers and gauges.

Chapter 12

Garage Equipment

Garage Equipment Series contains on the one hand devices for measuring and changing the air pressure in the tyre, on the other hand garage devices which work with fluids, especially compressed air, as working and transport agents.
The inflators, digital and portable with air tank or as hand tyre inflators, calibratable for commercial purpose and not calibratable for private use belong to the first group. The second group consists of different blowguns with a wide variety of nozzles, further washing guns, spray guns, painting guns and a sand blasting gun.

ООО "ПРОВЕРТ" www.prowert.ru info@prowert.ru +7 (495) 108-05-38

Notes

Please note general safety instructions in the relevant data sheets and manuals!

Manufacturers of machinery and equipment under EU law must prove the conformity of machinery or equipment with the applicable EU directives. A machine or system can only be put into operation if it is determined that the machinery or plant of the relevant EC Directive.

Pictures serve only as examples and are not binding. In general just one picture is shown for each group of products.

The **Technical data** are also for information only and without responsibility. Improvements in construction may be made at any time.
Measurements are in millimetres, pressures in bar (overpressures) and flow capacities in Nl/min based on normal conditions.

Connections are, as a general rule, threads according to DIN-ISO 228. The tolerance group A for male threads is not indicated separately. Left-hand threads are identified by the internationally usual addition LH. If several different thread connections are given for a piece of equipment, the largest original thread size is reduced for smaller connections (except for chapter 4 and chapter 7).

Main characteristics are specified and tests carried out according to the international norms for compressed air systems. These are for:

Filters	ISO 5782-1 and 2
Pressure reducers	ISO 6953-1 and 2
Spray lubricators	ISO 6301-1 and 2
Flow capacity	ISO 6358

Supply of services (Price upon request)
Test certificate EN 10204 2.1 or 2.2
Acceptance test certificate EN 10204 3.1 or 3.2
Certificate – single equipment protocol

ООО "ПРОВЕРТ" www.prowert.ru info@prowert.ru +7 (495) 108-05-38

Compressed Air Preparation - vma

System description of the filter system vma G 1/4 – G 2		**2**
Single units	Pre-filters (v)	**3**
	Micro-filters (m)	**4**
	Activated-charcoal-filters (a)	**5**
Combinations	v-m, m-a, v-m-a	**6**
Maintenance service units from filter combinations G 1/4	Pre-filters – Micro-filters	**7**
Accessories		**7**
Filter-regulater unit “microair” G 1/2 for painting applications		**8**

Compressed air preparation for the most critical requirements

Cleaning of compressed air with standard filters is insufficient for many applications. For cases of this kind, the filter system V-M-A, available as single units or combinations, offers a wide range of filters to meet all requirements, from technical-clean air working equipment via process air to odour-free air for breathing. Housing assembled from **vma modular system** for direct flange mounting with sizes I and II. Two sizes of housing and 6 different sizes of filter element. Connecting threads from G 1/4 to G2 in accordance with DIN-ISO 228. Housings and bowls are made of aluminium, plastic-coated or anodised, protected against corrosion, attractive appearance, easy to clean.

Components:

Differential gauges: Indicates the pressure drop in filters. We recommend that the filter element is changed when the pressure drop exceeds 0,6 bar (red zone). Full exploitation of service life of filter saves money-timely replacement stops wastage of energy. Gauges can be fitted as desired to be readable from front or rear (double scale).
Kit for bracket mounting of single units and combinations available as an accessory.
Filter elements: For every size of filter - three different elements of identical dimensions. See following pages for detailed description.
Condensate drain valves are available in different versions:
- **Fully automatic drain valve:** Standard for pre- and microfilter. Outboard, easily accessible for maintenance. Minimum operating pressure 4 bar.
- **Manual drain valve:** Fitted as standard in the form of a drain screw in the case of activated charcoal-filters, since these are not subject to condensation.

Single units

Pre-filters, Micro-filters, Activated-charcoal-filters
The **structure** of the v-m-a range as regards individual sizes and connecting threads is as follows: Two different sizes of housing are available with two or four different bowl lengths, which makes a total of 6 different nominal sizes or element sizes. For each size, two different connection threads are available (even three for the smallest sizes), thus making a total of 13 different versions of each single unit or combination.
The **relationship** between filter size and connecting thread is shown in the table below:

Housing size	I				II			
Nominal size	I 1		I 2		II 1	II 2	II 3	II 4
Connection thread	G 1/4	G 3/8	G 1/2	G 3/4	G 1	G 1 1/4	G 1 1/2	G2

Combinations

Pre-filter - Micro-filter
Micro-filter - Activated-charcoal-filter
Pre-filter - Micro-filter - Activated-charcoal-filter

Combinations are assembled from single units in the case of sizes I and II by simple flangemounting, using four tapered sleeves with screws and nuts.
The working sequence for flange mounting is as follows:
1. Lay the first unit on the table, with the flange face uppermost.
2. Insert the sealing ring and four nuts into the appropriate recesses.
3. Position the next unit with its flange face downwards.
4. Fit the tapered sleeves one at a time and tighten the screws lightly.
5. Fully tighten the screws, working crosswise.

Operation: As a protection of the differential gauge the unit must be charged **slowly** with pressure after assembly, so that a pressure equalization persists.

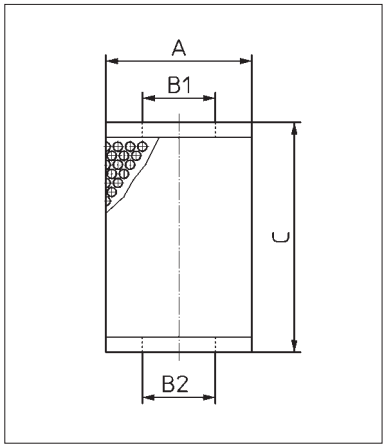

Filter elements

v Pre-filter element - sintered Polyethylen, chiefly for filtering of solid matter.
m Micro-filter element - borosilicate glass microfiber, chiefly to remove aerosols.
a Activated-charcoal-filter element - for adsorption of oil vapours.
Since the flow direction with pre-filters and micro-filters or activated-charcoal-filters is different, attention must be paid to this when changing filter elements or reassembling filters. The service life of filters up to the recommended time for replacement (when the pressure drop reaches 0,6 bar) is about 2000 hours of operation, depending on the incidencef contamination. We recommend a flow rate of between 10% and 80% of the specified nominal values.

Dimensions

Size	I1	I2	II1	II2	II3	II4
A	48		71			
B1/B2	24/12		48/12			
C	75	145	110	210	310	500

All three filter elements within each size have identical installation dimensions (A and B1/B2).

ООО "ПКФ ЭЛЕР" www.pneumatic.ru info@pneumatic.ru +7 (495) 788 0638

Pre-filters (v)

Filter elements made out of sintered Polyethylen with high capacity.
Application: Prefilters for use with microfilters and combinations of microfilters/activated-charcoal-filters, and as after-filters for adsorptive, absorptive and refrigerating dryers, dust filters for compressed air and other compressed gases.
Structure: 1. Polyethylencylinder
2. End caps aluminium
Mode of operation: As the compressed air enters the housing, the increased cross-section and the resulting reduction in velocity cause larger solid and liquid impurities to seperate out and drop into the bowl. All contamination with a particle size of greater than 2µm is retained on the large-area surface of the starshaped folded filter material. The high capacity of the filter ensures a long service life.
Cleaning: Should if possible be carried out by washing the filter with a warm soap solution and blowing it out from the inside to the outside. Cleaning should be carried out at the latest when the pressure drop reaches 0,6bar, i.e. the pressure-gauge pointer enters the red zone.

Standard version:

With differential gauge and external automatic drain valve A

Size	Thread	Order No. Pre-filter compl.	Element
I1	G 1/4*	**429.2102**	**429-152**
	G 3/8*	**429.2104**	**429-152**
	G 1/2*	**429.2106**	**429-152**
I2	G 1/2*	**429.2206**	**429-156**
	G 3/4	**429.2208**	**429-156**
II1	G 3/4*	**429.2308**	**429-158**
	G 1*	**429.2309**	**429-158**
II2	G 1*	**429.2409**	**429-159**
	G 1 1/4*	**429.2410**	**429-159**
II3	G 1 1/4*	**429.2510**	**429-161**
	G 1 1/2*	**429.2511**	**429-161**
II4	G 1 1/2*	**429.2611**	**429-162**
	G 2	**429.2612**	**429-162**

* Inlet and outlet reduced

Order key for all variants:

429.x102
2 – with differential gauge
5 – without differential gauge

for example:
429.2102 without** differential gauge = **429.5102

Technical data

Max. operating pressure (p_1)	16bar
Operating temperature	+5 °C up to +80 °C
Mounting position	vertical
Direction of flow	see arrow (from inside to outside)
Connection thread	G 1/4 to G2 (see table)
Min. operating pressure	
- manually operated drain valve:	from 0bar
- external automatic drain valve A:	4bar
Differential gauge	0 to 2bar (0 to 29psi)
Efficiency	99,99% referred to 2µm (solid impurities)
Compressed air quality	ISO 8573-1, Class 2

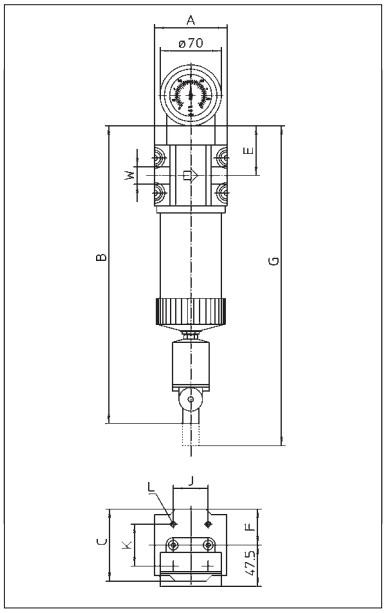

Dimensions

Size	Thread W	Unit dimensions [mm] A	B	C	E	F	G***	Mounting J	K	L	Weight [g]
I1	G 1/4*, G 3/8*, G 1/2*	83	335	83	57	41,5	410	40	48	M6	2100
I2	G 1/2*, G 3/4	83	405	83	57	41,5	550	40	48	M6	2300
II1	G 3/4*, G1*	118	420	118	72	59	530	70	80	M8	4800
II2	G1*, G 1 1/4*	118	520	118	72	59	730	70	80	M8	5300
II3	G 1 1/4*, G 1 1/2*	118	620	118	72	59	930	70	80	M8	5700
II4	G 1 1/2*, G2	118	810	118	72	59	1310	70	80	M8	6400

* Inlet and outlet reduced *** Space required to change element

Rates of flow

Size	Thread W	Rates of flow Q**
I1	G 1/4*, G 3/8*, G 1/2*	60 (1000)
I2	G 1/2*, G 3/4	120 (2000)
II1	G 3/4*, G1*	180 (3000)
II2	G1*, G 1 1/4*	320 (5333)
II3	G 1 1/4*, G 1 1/2*	500 (8333)
II4	G 1 1/2*, G2	800 (13333)

* Inlet and outlet reduced
** Rates of flow in Nm³/h (Nl/min) measured at p_1=6bar and Δp= 0,05bar.

Condensate drain valves, see chapter 8

Micro-filters (m)

Borosilicate glass microfiber filters. Used mainly to filter out aerosols and solid contamination with a particle size of over 0,01 µm. We recommend that a prefilter "v" is fitted upstream.
Application: Paint-spraying, sandblasting, control systems, vacuum systems, measuring instruments, fluids, air for conveying devices, process air, aircushion bearings, air-conditioning systems.
Structure:
1. Inner support, perforated stainless steel.
2. Pre-filtration mesh.
3. Borosilicate glass microfiber material.
4. Support fabric.
5. Outer support, perforated stainless steel.
6. Foam-material sheath.
7. End caps aluminium.

Mode of operation: Air, which should if possible be pre-cleaned (pre-filter), flows through the filter element from the inside to the outside. Coarse particles are first removed by the pre-filtration mesh, and fine filtration is then provided by the multi-layer borosilicate glass microfiber material. The high void content of 94 % between the glass fibres ensures a high capacity for solid particles.
Cleaning: Is not possible. The filter elements should be replaced at the latest when the pressure drop reaches 0,6 bar, i.e. the differential pressure-gauge pointer enters the red zone respectively after about 2000 hours of operation.

Standard version:

With differential gauge and external automatic drain valve A

Size	Thread	Order No. Micro-filters compl.	Order No. Element
I1	G 1/4*	**430.2102**	**430-2**
	G 3/8*	**430.2104**	**430-2**
	G 1/2*	**430.2106**	**430-2**
I2	G 1/2*	**430.2206**	**430-6**
	G 3/4	**430.2208**	**430-6**
II1	G 3/4*	**430.2308**	**430-8**
	G 1*	**430.2309**	**430-8**
II2	G 1*	**430.2409**	**430-9**
	G 1 1/4*	**430.2410**	**430-9**
II3	G 1 1/4*	**430.2510**	**430-11**
	G 1 1/2*	**430.2511**	**430-11**
II4	G 1 1/2*	**430.2611**	**430-12**
	G 2	**430.2612**	**430-12**

* Inlet and outlet reduced

Order key for all variants:

430.x102
- **2 – with differential gauge**
- **5 – without differential gauge**

for example:
430.2102 without** differential gauge = **430.5102

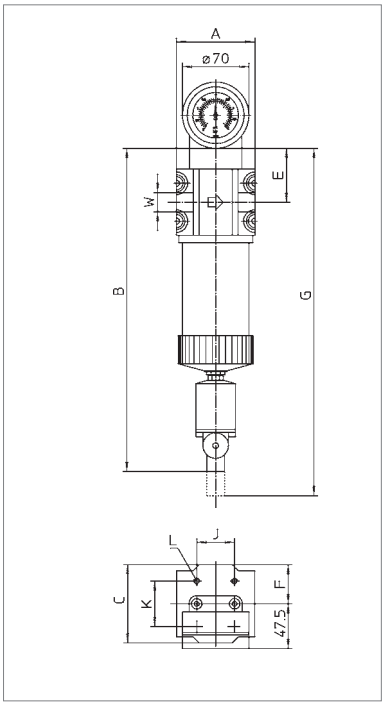

Technical data

Max. operating pressure (p_1)	16 bar
Operating temperature	+5 °C up to +80 °
Mounting position	vertical
Direction of flow	see arrow (from inside to outside)
Connection thread	G 1/4 to G 2 (see table)
Min. operating pressure	
- manually operated drain valve:	from 0 bar
- external automatic drain valve A:	4 bar
Differential gauge	0 to 2 bar (0 to 29 psi)
Efficiency	99,9999 % referred to 0,01 µm
Residual oil content	0,01 ppm
Compressed air quality	ISO 8573-1, Dust/Oil, Class 1

Rates of flow

Size	Thread W	Rates of flow Q**
I1	G 1/4*, G 3/8*, G 1/2*	78 (1300)
I2	G 1/2*, G 3/4	120 (2000)
II1	G 3/4*, G 1*	245 (4080)
II2	G 1*, G 1 1/4*	275 (4580)
II3	G 1 1/4*, G 1 1/2*	390 (6500)
II4	G 1 1/2*, G 2	540 (9000)

* Inlet and outlet reduced
** Rates of flow in Nm³/h (Nl/min) measured at p_1 = 6 bar and Δp = 0,1 bar

Dimensions

Size	Thread W	Unit dimensions [mm] A	B	C	E	F	G***	Mounting J	K	L	Weight [g]
I1	G 1/4*, G 3/8*, G 1/2*	83	335	83	57	41,5	410	40	48	M6	2100
I2	G 1/2*, G 3/4	83	405	83	57	41,5	550	40	48	M6	2300
II1	G 3/4*, G 1*	118	420	118	72	59	530	70	80	M8	4800
II2	G 1*, G 1 1/4*	118	520	118	72	59	730	70	80	M8	5300
II3	G 1 1/4*, G 1 1/2*	118	620	118	72	59	930	70	80	M8	5700
II4	G 1 1/2*, G 2	118	810	118	72	59	1310	70	80	M8	6400

* Inlet and outlet reduced *** Space required to change element

Condensate drain valves, see chapter 8

ООО "ПРОВЕРТ" www.prowert.ru info@prowert.ru +7 (495) 108-06-38

Activated-charcoal-filters (a)

Activated-charcoal-filters for the adsorption of liquid vapours. We recommend that a micro-filter M is fitted upstream in all cases where dried air is not used.
Application: Food industry, packing industry, beverage industry, air for breathing, pressure chambers, medicinal technology, dental technology, measurement technology.
Structure: 1. Activated-charcoal layer.
2. Filtration layer.
3. Support sheath, perforated stainless steel.
4. End caps aluminium.
Mode of operation: The pre-cleaned compressed air (from a dryer, microfilter or microfilter with prefilter) first flows through the activated-charcoal layer. The thickness of this layer ensures a sufficient contact time for the adsorption of liquid vapours. Any carried-over activated-charcoal particles are retained in the outer filter layer. In order to ensure a long service life for the filter, the compressed air which enters the activated-charcoal filter should not contain any solid or liquid contamination.
Cleaning or regeneration is not possible. The filter elements should be replaced at the latest after about 2000 hours of operation.

Versions:

Without differential gauge, with manual drain valve

Size	Thread	Order No.	
		Activated-charcoal-filters	Element
I1	G 1/4*	**431.6102**	**431-2**
	G 3/8*	**431.6104**	**431-2**
	G 1/2*	**431.6106**	**431-2**
I2	G 1/2*	**431.6206**	**431-6**
	G 3/4	**431.6208**	**431-6**
II1	G 3/4*	**431.6308**	**431-8**
	G 1*	**431.6309**	**431-8**
II2	G 1*	**431.6409**	**431-9**
	G 1 1/4*	**431.6410**	**431-9**
II3	G 1 1/4*	**431.6510**	**431-11**
	G 1 1/2*	**431.6511**	**431-11**
II4	G 1 1/2*	**431.6611**	**431-12**
	G 2	**431.6612**	**431-12**

* Inlet and outlet reduced

Technical data

Max. operating pressure (p_1)	16 bar
Operating temperature	+5 °C up to +80 °C
Mounting position	vertical
Direction of flow	see arrow (from inside to outside)
Connection thread	G 1/4 to G 2 (see table)
Residual oil content	0,005 ppm
Compressed air quality	ISO 8573-1, Class 1

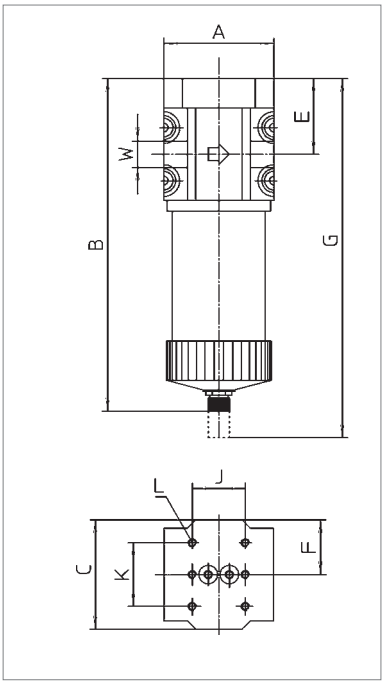

Dimensions

Size	Thread	Unit dimensions [mm]						Mounting			Weight [g]
	W	A	B	C	E	F	G***	J	K	L	
I1	G 1/4*, G 3/8*, G 1/2*	83	245	83	57	41,5	320	40	48	M6	1890
I2	G 1/2*, G 3/4	83	315	83	57	41,5	460	40	48	M6	2090
II1	G 3/4*, G 1*	118	330	118	72	59	440	70	80	M8	4590
II2	G 1*, G 1 1/4*	118	430	118	72	59	640	70	80	M8	5090
II3	G 1 1/4*, G 1 1/2*	118	530	118	72	59	840	70	80	M8	5490
II4	G 1 1/2*, G 2	118	720	118	72	59	1220	70	80	M8	6190

*** Space required to change element * Inlet and outlet reduced

Rates of flow

Size	Thread	Rates of flow
	W	Q**
I1	G 1/4*, G 3/8*, G 1/2*	30 (500)
I2	G 1/2*, G 3/4	60 (1000)
II1	G 3/4*, G 1*	90 (1500)
II2	G 1*, G 1 1/4*	160 (2667)
II3	G 1 1/4*, G 1 1/2*	250 (4167)
II4	G 1 1/2*, G 2	400 (6667)

* Inlet and outlet reduced

** Rates of flow in Nm³/h (Nl/min)
measured at p_1 = 6 bar and Δp = 0,12 bar

Condensate drain valves, see chapter 8

Combinations

Will be supplied as single components with connectors.

Variants: **Pre-filter - Micro-filter (v-m)**
Micro-filter - Activated-charcoal-filter (m-a)
Pre-filter - Micro-filter - Activated-charcoal-filter (v-m-a)

Standard version:

With differential gauge

Size	Thread	Order No. v-m	Order No. m-a	Order No. v-m-a
I1	G 1/4*	**432.2102**	**433.2102**	**434.2102**
	G 3/8*	**432.2104**	**433.2104**	**434.2104**
	G 1/2*	**432.2106**	**433.2106**	**434.2106**
I2	G 1/2*	**432.2206**	**433.2206**	**434.2206**
	G 3/4	**432.2208**	**433.2208**	**434.2208**
II1	G 3/4*	**432.2308**	**433.2308**	**434.2308**
	G 1*	**432.2309**	**433.2309**	**434.2309**
II2	G 1*	**432.2409**	**433.2409**	**434.2409**
	G 1 1/4*	**432.2410**	**433.2410**	**434.2410**
II3	G 1 1/4*	**432.2510**	**433.2510**	**434.2510**
	G 1 1/2*	**432.2511**	**433.2511**	**434.2511**
II4	G 1 1/2*	**432.2611**	**433.2611**	**434.2611**
	G 2	**432.2612**	**433.2612**	**434.2612**

* Inlet and outlet reduced

Order key for additional options:

432.x102

2 – with differential gauge
5 – without differential gauge

for example:
***432.2102 without** differential gauge* = **432.5102**

Technical data

See single devices.

Rates of flow / Dimensions

Size	Thread	Rates of flow Q**	Installation lenght [A] vm/ma	Installation lenght [A] vma
I1	G 1/4*, G 3/8*, G 1/2*	30 (500)	166	249
I2	G 1/2*, G 3/4	60 (1000)	166	249
II1	G 3/4*, G 1*	90 (1500)	236	354
II2	G 1*, G 1 1/4*	160 (2667)	236	354
II3	G 1 1/4*, G 1 1/2*	250 (4167)	236	354
II4	G 1 1/2*, G 2	400 (6667)	236	354

* Inlet and outlet reduced

** Rates of flow in Nm³/h (Nl/min) measured at $p_1 = 6$ bar and $\Delta p = 0{,}1$ bar

Condensate drain valves, see chapter 8

ООО "ПРОВЕРТ" www.prowertru.info@prowert.ru +7 (495) 108-06-38

Maintenance units G 1/4

The maintenance units G 1/4 consists of a **combination of prefilter** and **microfilter,** inclusive automatic drain valves, supplemented by a pressure regulator and optional difference gauge.
Through the installation of maintenance units in the network of air (4-16 bar) is the provision of purified and reduced air.
The pre-filter and micro-filter clean air (solid impurity 0.01 micron and 0.01 ppm residual) channeled through the pressure regulator on the distribution and pressure hoses to the respective consumers (e.g. instrument sealing air). Flow rate at 1 bar (Δp 0,2 bar) 200 Nl/min.

Versions	Order No.
Without differential gauge with automatic drain valves, Bracket mounting inclusive, Regulator with gauge (range 0,5 - 3 bar) adjusted at 1 bar.	**432.017**
With differential gauge for micro-filter, with automatic drain valves, Bracket mounting inclusive, Regulator with gauge (range 0,5 - 3 bar) adjusted at 1 bar.	**432.002**

Accessories

Article	Order No. Size I	Size II
Connectors (Kit) for flange connection of two units. Kit consists of one sealing ring and four tapered sleeves, screws and nuts. Two kits are required for the flange connection of three units.	**429-29**	**429-33**
Bracket mounting (Kit) for mounting on vertical surfaces. Consists of a mounting bracket and two screws to secure this to the unit, at the front or rear as desired.	**429-25**	**429-27**
Special wrench (no picture) to dismantle used containers to replace the filter cartridge.	**429-70**	**429-92**
Electronic drain valve 230 VAC of the new generation. Contactless measurement of accumulated condensate which is the discharged without the loss of valuable compressed air.	**5370.200**	
Adapter set for growing at bowls (5370.200) (no picture) for attachment to the filter. M 14 x 1i - G 1/2 a (Dimensions, see chapter 8)	**5370-400**	

Spare parts

Article	Order No. Size I / Size II
Differential gauges ø 70 For all filters. Two-part scale 0 to 2 bar (0 to 29 psi). Green zone 0 to 0,6 bar, red zone 0,6 to 2 bar. Complete with mounting components for flange mounting (2 screws, 2 seals).	**5429.10**
Fully automatic external drain valve A Beetwen 4 and 16 bar. When a certain condensation level is reached, a float activates a pneumatic servo valve and the drain valve is opened. Connection G 1/8.	**5370.4**

Filter-regulating station “microair”

439.2

439.3

Air quality according to ISO 8573.1 - Class 1

Multi-stage compressed air preparation system with high-quality filter elements (pre-filter, micro-filter and, if needed, activated carbon-filter) for optimal paint results, avoiding (rendering unnecessary) costly retouching work and preventing operational failure. Removes contamination such as H_2O, CO, CO_2, hydrocarbons and dust particles. High flow-rate (3000 Nl/min) with differential gauge as an individual indicator of the degree of contamination. Provides optimal economic efficiency, service and safety.

Areas of application:

Sand blasting - Chemical industry - Synthetics industry - Production of paints and varnishes - Packaging industry - Technical specification subject to prior change.

Construction and components:

Stage one - Pre-filter

Finely sintered bronze filter, 5 µm filtration, for filtering solids and liquids, filtration efficiency 99 %, (reusable after washing). With external automatic drain valve A.

Stage two - Pressure regulator

Independent of primary pressure with increased precision, without air consumption, regulates the desire operating pressure from 0,5 to 10 bar. Gauge with solvent resistant glass.

Stage three - Micro-filter

Multi-layered deep-bed filter with three-dimensional filtration by borosilicate fibrous web with high-capacity dirt-absorption. For fine filtration of solid particles in ressed air and oil-water aerosols up to a residual oil content of 0,01 mg/m³.

Chemically and biologically inactive, water-resistant. Stainless steel protective case and and aluminium cover. Filtration efficiency 99,99998 % at 0,01 µm. Tested and approved according to LPV 0.700.9900 (Fraunhofer Instititute).

Distribution unit

For removal of air. Available with 2 ball valves or 2 couplings.

Version Pre-filter – Pressure regulator – Micro-filter	**Order No.**
Filter regulating station with distribution block and 2 ball valves G 3/8	**439.2**
Filter regulating station with distribution block and 2 couplings DN 7,2	**439.3**

Bracket mounted.

439.4

Accessories

Stage four - Activated-charcoal-filter

The filter regulator can be extended with the extension set **Activated-charcoal-filter + distribution unit.**
The advantage is a breathing air quality with substantially less impurity than the ambient air.
The add-on pack can be attached to the double nipple 185.77 to 439.2 or 439.3.

Activated carbon filter: Multilayer activated carbon for the adsorption of gaseous fluids and hydrocarbons (oil aerosols, odors). Residual oil content of 0,005 ppm. See also item description.

Article	**Order No.**
Activated carbon filter + distributor with 2 couplings DN 7,2 **with gauge**	**439.4**
Double nipple for mounting on 439.2 or 439.3	**185.77**

429-100 430-6 431-6

Spare parts

Article	**Order No.**
Pre-filter element	**429-100**
Micro-filter element	**430-6**
Activated-charcoal-filter element	**431-6**
Gauge ø 50, vertical, 0 - 16 bar (on the distribution block (without picture)	**102**
Gauge ø 63, horizontal, 0 - 16 bar (on the pressure regulator (without picture)	**89**

Technical data

Connection thread		G 1/2
Max. operating pressure (p_1)		16 bar
Operating temperature		+5 °C up to +80 °C
Rates of flow		3000 Nl/min
Materials	- seals	NBR
	- housing	Al, CuZn39Pb3
	- distributor, bowl	aluminum plastic coated

Subject to technical changes.

ООО "ПРОВЕРТ" www.prowertru.info@prowert.ru +7 (495) 108-06-38

Compressed Air Preparation - standard

Filters	small, medium compact, large, max super	**2** **3** **4**
Filters - 40 bar	I, II, super	**5**
Filters - 60 bar	I, II	**6**
Microfilters	small medium, large super	**7** **8** **9**
Microfilters - 40 bar	I, II, super	**10**
Microfilters - 60 bar	I, II	**11**
Small pressure regulators		**12**
Pressure regulators	small, intermediate, medium compact, large, max super	**13** **14** **15**
Pressure regulators - 40 bar	small, medium	**16**
High pressure regulators - 60 bar	I, II	**17**
Pressure line regulators up to150 bar outlet pressure		**18**
Precision pressure regulators		**19**
Pressure regulators with internal gauge in setting knob		**20**
Water pressure regulators	small, medium, large, max	**21**
Lubricators	small, medium compact, large, max super	**22** **23** **24**
Small lubricators for air pressure tools	small oiler	**25**
Filter pressure regulators	small, medium	**26**
Two-piece maintenance units	small, medium	**27**
Three-piece maintenance units	small, medium compact, large, max super	**28** **29** **30**
Parts for mounting and connection	Bracket sets: Mounting on top of the housing Attachment to the handwheel thread Attachment at the bottom of the cover fixing screws Connecting parts of the basic units (without reducing) for two-piece and three-piece maintenance units	**31**
Accessories	Panel mounting, reductions	**32**

ООО "ПРОВЕЛ" www.provel.ru info@provel.ru +7 (495) 234-0636

Filters - G 1/8 – G 1/2

322.23

Compressed air filters clean the compressed working air of solid and liquid components (soil particles and condensation) and thereby protecting the downstream components from dirt and wear. The cleansing is done in two stages by means of cycloning (condensation) and sintering filters (solid contamination).
Port sizes G 1/8 to G 1/2.

Size	Order No. Connection threads G 1/8*	G 1/4*	G 3/8	G 1/2
With plastic bowl and manually operated drain valve				
small	**322.21***	**322.22***	**322.23**	**-**
medium	**-**	**-**	**322.35***	**322.36**
With plastic bowl and semi-automatic drain valve				
small	**322.521***	**322.522***	**322.523**	**-**
medium	**-**	**-**	**322.535***	**322.536**
With plastic bowl and external automatic drain valve A (max. 16bar)				
small	**370.21***	**370.22***	**370.23**	**-**
medium	**-**	**-**	**370.35***	**370.36**

* inlet and outlet reduced (reductions added loosely, see page 32)

Order key for additional options:

322.xx**x**

M – metal bowl
S – bowl protection

for example:
322.21** with **bowl protection
*= 322.21**S***

Spare parts and accessories

		Order No. small	medium
Bracket mounting for mounting on top of the housing		**322-24**	**322-25**
Bowl protection for plastic bowl, with bowl ring		**322-130**	**322-131**
Metal bowl with seals and	- manually operated drain valve	**324-101**	**324-109**
	- semi-automatic drain valve	**324-113**	**324-117**
	- external automatic drain valve A	**324-114**	**324-118**
Plastic bowl with seals and	- manually operated drain valve	**322-112**	**322-118**
	- semi-automatic drain valve	**322-113**	**322-119**
	- external automatic drain valve A	**322-114**	**322-120**
Bowl ring for plastic bowl and metal bowl		**287-25**	**297-2**
Sealing ring for all bowls		**287-6**	**297-10**
Filter element	filter porosity 40µm (mounted)	**287-10**	**267-37**
	filter porosity 5µm	**287-13**	**298-9**

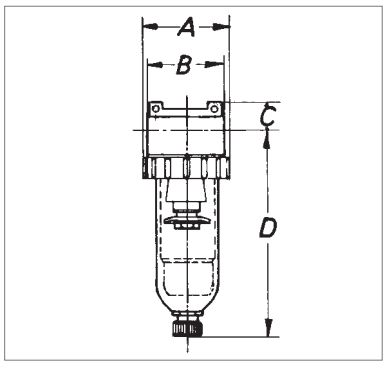

Technical data

		Size small	Size medium
Nominal rates of flow**		1.050Nl/min	4.670Nl/min
Max. operating pressure (p_1)	with plastic bowl/metal bowl	16bar/25bar	
Operating temperature	with plastic bowl/metal bowl	0°C up to +50°C/0°C up to +90°C	
Effective bowl volume		25cm³	80cm³
Mounting position		vertical	
Direction of flow		arrow	
Nominal width		DN6	DN15
Nominal pressure (housing)		PN25	PN25
Weight		390g	950g
Material	- seals	NBR	
	- housing	zinc alloy	
	- filter element	sintered bronze	
	- plastic bowl	polycarbonate	

** measured at p_1 = 6bar and Δp = 1bar

Dimensions [mm]

Size	small G 1/8*	G 1/4*	G 3/8	medium G 3/8*	G 1/2
A	56	56	56	87	87
B	57	57	50	88	80
C	19	19	19	24	24
D**	135	135	135	172	172

* inlet and outled reduced (reductions added loosely)

** with semi-automatic drain valve: + 10mm
with external automatic drain valve A: + 90mm

Rates of flow

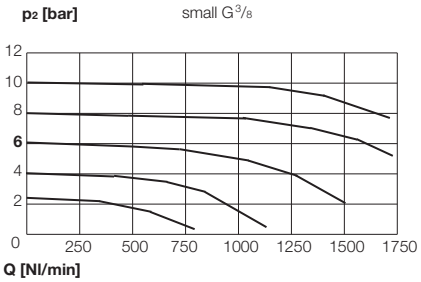

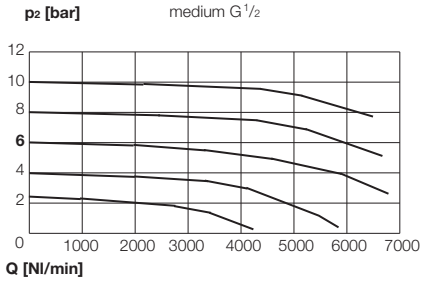

Condensate drain valves see chapter 8
Fasteners and connecting elements see page 31

ООО "ПРОВЕРТ" www.prowert.ru info@prowert.ru +7 (495) 103 0638

Filters - G 3/4 – G 1 1/2

Compressed air filters clean the compressed working air of solid and liquid components (soil particles and condensation) and thereby protecting the downstream components from dirt and wear. The cleansing is done in two stages by means of cycloning (condensation) and sintering filters (solid contamination).
Port sizes G 3/4 to G 1 1/2.

322.49

Size	Order No. Connection threads G 3/4*	G 1	G 1 1/4*	G 1 1/2
With plastic bowl and manually operated drain valve				
compact	**405.38***	**405.39**	**-**	**-**
large	**322.48***	**322.49**	**-**	**-**
max	**-**	**-**	**322.410***	**322.411**
With plastic bowl and semi-automatic drain valve				
compact	**405.538***	**405.539**	**-**	**-**
large	**322.548***	**322.549**	**-**	**-**
max	**-**	**-**	**322.5410***	**322.5411**
With plastic bowl and external automatic drain valve A (max. 16 bar)				
compact	**370.38***	**370.39**	**-**	**-**
large	**370.48***	**370.49**	**-**	**-**
max	**-**	**-**	**370.410***	**370.411**

* inlet and outlet reduced (reductions added loosely, see page 32)

Order key for additional options:

405.xx**x**
- **M** – metal bowl
- **S** – bowl protection

for example:
405.38 with ***bowl protection*** *= 405.38**S***

Spare parts and accessories

		Order No. compact	large	max
Bracket mounting for mounting on top of the housing		**405-4**	**281-26**	**281-26**
Bowl protection for plastic bowl, with bowl ring		**322-131**	**281-24**	**281-24**
Bowl ring for bowl protection		**-**	**300-31**	**300-31**
Metal bowl with seals and				
	- manually operated drain valve	**324-109**	**322-125**	**322-125**
	- semi-automatic drain valve	**324-117**	**322-126**	**322-126**
	- external automatic drain valve A	**324-118**	**322-127**	**322-127**
Plastic bowl with seals and				
	- manually operated drain valve	**322-118**	**322-122**	**322-122**
	- semi-automatic drain valve	**322-119**	**322-123**	**322-123**
	- external automatic drain valve A	**322-120**	**322-124**	**322-124**
Bowl ring for plastic bowl and metal bowl		**297-2**	**279-2**	**279-2**
Sealing ring for all bowls		**297-10**	**279-9**	**279-9**
Filter element	filter porosity 40 µm (mounted)	**267-37**	**281-14**	**281-14**
	filter porosity 5 µm	**298-9**	**-**	**-**

Technical data

		Size compact	Size large	Size max
Nominal rates of flow**		6.700 Nl/min	10.000 Nl/min	12.500 Nl/min
Max. operating pressure (p_1)	with plastic-/metal bowl		16 bar / 25 bar	
Operating temperature	with plastic-/metal bowl		0°C up to +50°C / 0°C up to +90°C	
Effective bowl volume		80 cm³	260 cm³	260 cm³
Mounting position			vertical	
Direction of flow			arrow	
Nominal width		DN20	DN20	DN25
Nominal pressure (housing				PN25
Weight		1320 g	1870 g	2120 g
Material	- seals		NBR	
	- housing	zinc alloy	alu alloy	aluminum
	- filter element		sintered bronze	
	- plastic bowl		polycarbonate	

** measured at p_1 = 6 bar and Δp = 1 bar

Rates of flow

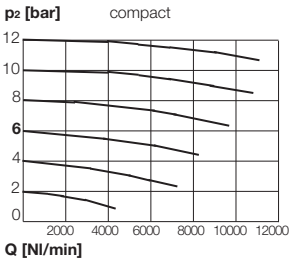

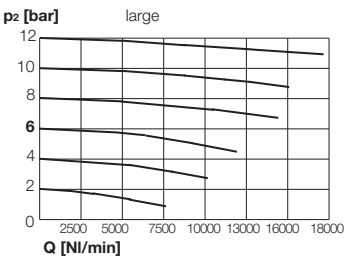

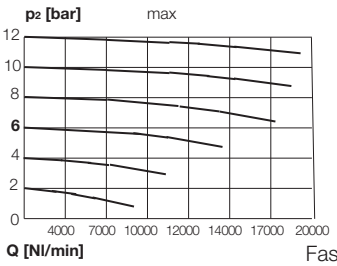

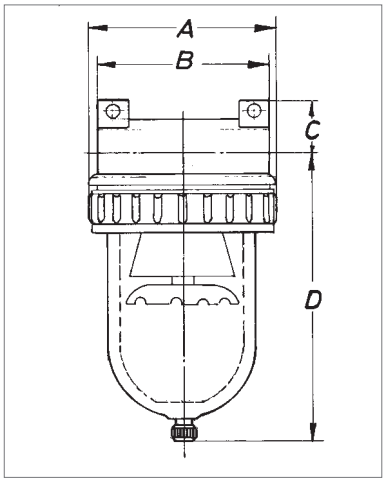

Dimensions [mm]

Size	compact G 3/4*	compact G 1	large G 3/4*	large G 1	max G 1 1/4*	max G 1 1/2
A	102	90	133	133	133	133
B	102	90	134	120	134	120
C	38	38	36	36	46	46
D**	175	175	206	206	216	216

* inlet and outlet reduced (reductions added loosely)

** - with semi-automatic drain valve: +10 mm
- with external automatic drain valve A: +90 mm

Condensate drain valve see chapter 8
Fasteners and connecting elements see page 31

OOO "IPCEPT" www.prowett.ru info@prowett.ru +7 (495) 108-05-88

Filters - G1 1/2 – G2

Compressed air filters clean the compressed working air of solid and liquid components (soil particles and condensation) and thereby protecting the downstream components from dirt and wear. The cleansing is done in two stages by means of cycloning (condensation) and sintering filters (solid contamination).
Port sizes G1 1/2 to G2.

Size	Order No. Connection threads G1 1/2*	G2
With plastic bowl and manually operated drain valve		
super	**456.211***	**456.212**
With plastic bowl and semi-automatic drain valve		
super	**456.511***	**456.512**
With plastic bowl and external automatic drain valve (max. 16 bar)		
super	**456.611***	**456.612**

* inlet and outlet reduced (reductions added loosely, see page 32)

Order key for additional options:

456.xxx**x**

- **M** – metal bowl
- **S** – bowl protection

for example:
456.212** with **metal bowl** = 456.212**M

Spare parts and accessories

		Order No. super
Bracket mounting for mounting on top of the housing		**457-12**
Bowl protection for plastic bowl		**281-24**
Bowl ring for bowl protection		**300-31**
Metal bowl with seals and	- manually operated drain valve	**322-125**
	- semi-automatic drain valve	**322-126**
	- external automatic drain valve A	**322-127**
Plastic bowl with seals and	- manually operated drain valve	**322-122**
	- semi-automatic drain valve	**322-123**
	- external automatic drain valve A	**322-124**
Bowl ring for plastic bowl		**279-2**
Sealing ring for all bowls		**279-9**
Filter element	filter porosity 40 µm (mounted)	**454-3**
	filter porosity 5 µm	**454-11**

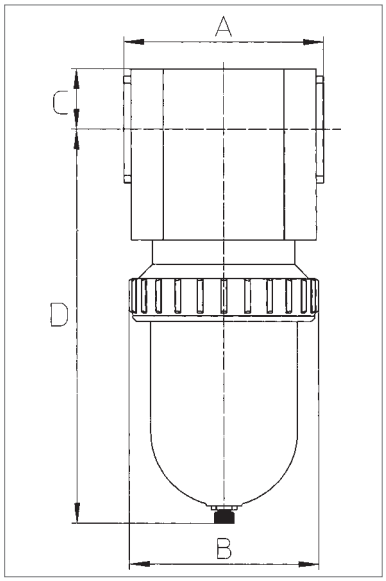

Technical data

		Size super
Nominal rates of flow**		15830 Nl/min
Max. operating pressure (p_1)	- with plastic bowl	16 bar
	- with metal bowl	25 bar
Operating temperature	- with plastic bowl	0 °C up to +50 °C
	- with metal bowl	0 °C up to +90 °C
Effective bowl volume		500 cm³
Mounting position		vertical
Direction of flow		arrow
Nominal width		DN 50
Nominal pressure (housing)		PN 25
Weight		5340 g
Material	- seals	NBR
	- housing	aluminum
	- filter element	sintered bronze
	- plastic bowl	polycarbonate

** measured at p_1 = 6 bar and Δp = 0,5 bar

Dimensions [mm]

Size	super	
Connection threads	G1 1/2*	G2
A	140	140
B	133	133
C	42	42
D**	330	330

* inlet and outled reduced (reductions added loosely)

** - with semi-automatic drain valve: +10 mm
- with external automatic drain valve A: +90 mm

Rates of flow

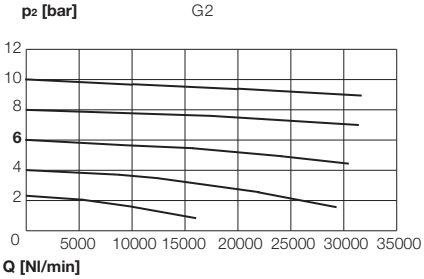

Condensate drain valves see chapter 8
Fasteners and connecting elements see page 31

ООО "ЭВО Пневматика" www.pnewent.ru info@pnewent.ru +7 (495) 150-0628

Filters 40 bar - G 3/8 – G 2

Compressed air filters clean the compressed working air of solid and liquid components (soil particles and condensation) and thereby protecting the downstream components from dirt and wear. The cleansing is done in two stages by means of cycloning (condensation) and sintering filters (solid contamination).
40 bar compressed air filter in a compact design. Manually operated drain (Draining under pressure only possible until 25 bar!). Sintered bronze filter element. Housing made of aluminum (black anodized). Bowl of brass. Test certificate for pressure bowl included.

445.016

Filter porosity 40 µm	Order No.					
	Connection threads					
Size	G 3/8*	G 1/2	G 3/4*	G 1	G 1 1/2*	G 2
I	**445.015***	**445.016**	-	-	-	-
II	-	-	**445.008***	**445.009**	-	-
super	-	-	-	-	**454.411***	**454.41**

* inlet and outlet reduced (reductions added loosely, see page 32)

Spare parts and accessories

		Order No.		
		Size I	Size II	super
Bracket mounting for mounting on top of the housing		**445-39**	**445-28**	**429-27**
Filter element	filter porosity 40 µm (mounted)	**394-16**	**267-37**	**454-3**
	filter porosity 5 µm	**394-37**	**298-9**	**454-11**
Manual drain valves for metal bowls		**275-41*** **	**275-41*** **	**275-41*** **

*** draining under pressure only possible until 25 bar!

Technical data

	Size I	Size II	Size super
Nominal rates of flow**	2660 Nl/min	6000 Nl/min	15830 Nl/min
Max. operating pressure (p_1)		40 bar (PN 40)	
Operating temperature		0 °C up to +90 °C	
Effective bowl volume	80 cm³	100 cm³	300 cm³
Mounting position		vertical	
Direction of flow		arrow	
Nominal width	DN 15	DN 20	DN 50
Weight 1220 g	2000 g	5800 g	
Material - seals		NBR	
- housing		aluminum	
- metal bowl	brass	brass	aluminum
- filter element		sintered bronze	

** measured at p_1 = 6 bar and Δp = 0,2 bar

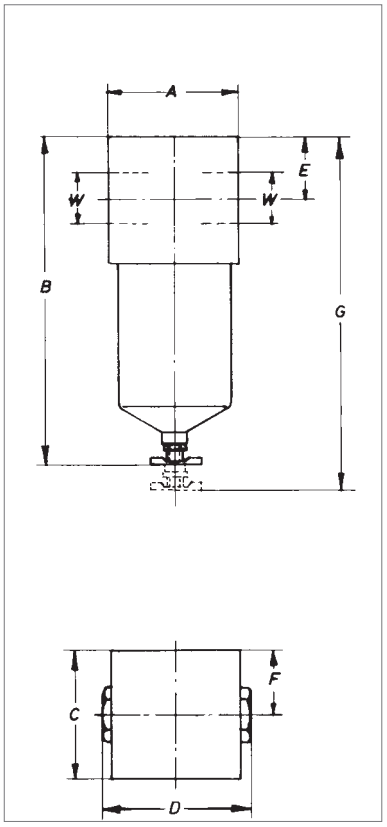

Rates of flow

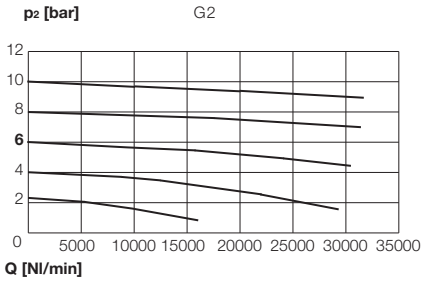

Dimensions [mm]

Size	I		II		super	
Connection threads	G 3/8*	G 1/2	G 3/4*	G 1	G 1 1/2*	G 2
A	65	65	80	80	140	140
B	200	200	210	210	285	285
C	65	65	80	80	120	120
D	70	65	92	80	160	140
E	32	32	40	40	42,5	42,5
F	31	31	40	40	70	70
G**	250	250	285	285	350	350

* inlet and outled reduced (reductions added loosely)
** Space required to change element.

Condensate drain valve see chapter 8
Fasteners and connecting elements see page 31

ООО "ПРОВЕРТ" www.prowert.ru info@prowert.ru +7 (495) 108-05-88

Filters 60 bar - G 3/8 – G 1

Compressed air filters clean the compressed working air of solid and liquid components (soil particles and condensation) and thereby protecting the downstream components from dirt and wear. The cleansing is done in two stages by means of cycloning (condensation) and sintering filters (solid contamination).
60 bar compressed air filter in a compact design. Manually operated drain (Draining under pressure only possible until 25 bar!). Sintered bronze filter element. Housing made of aluminum (black anodized). Bowl of brass. Test certificate for pressure bowl included.

Filter porosity 40 µm	Order No.			
	Connection threads			
Size	G 3/8*	G 1/2	G 3/4*	G 1
I	**475.015***	**475.016**	**-**	**-**
II	**-**	**-**	**475.008***	**475.009**

* inlet and outlet reduced (reductions added loosely, see page 32)

Spare parts and accessories

		Bestell-Nr.	
		Size I	Size II
Bracket mounting for mounting on top of the housing		**445-39**	**445-28**
Filter element	filter porosity 40 µm (mounted)	**394-16**	**267-37**
	filter porosity 5 µm	**394-37**	**298-9**
Manual drain valves for metal bowls		**275-41*** **	**275-41*** **

*** draining under pressure only possible until 25 bar!

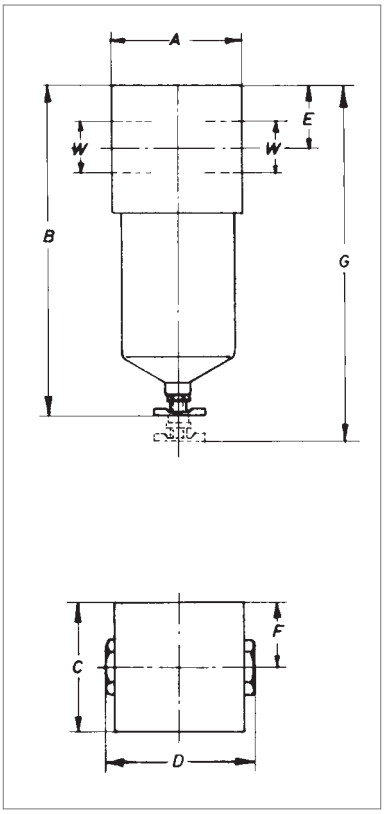

Technical data

	Size I	Size II
Nominal rates of flow**	2660 Nl/min	6000 Nl/min
Max. operating pressure (p_1)	60 bar (PN 60)	
Operating temperature	0 °C up up to +90 °C	
Effective bowl volume	80 cm³	100 cm³
Mounting position	vertical	
Direction of flow	arrow	
Nominal width	DN15	DN20
Weight	1400 g	3000 g
Material - seals	NBR	
- housing	aluminum	
- metal bowl	brass	
- filter element	sintered bronze	

** measured at p_1 = 6 bar and Δp = 0,2 bar

Dimensions [mm]

Size	I		II	
Connection threads	G 3/8*	G 1/2	G 3/4*	G 1
A	65	65	80	80
B	185	185	200	200
C	65	65	80	80
D	70	65	92	80
E	25	25	30	30
F	33	33	40	40
G**	205	205	285	285

* inlet and outled reduced
(reductions added loosely)
** space required to change element.

Rates of flow

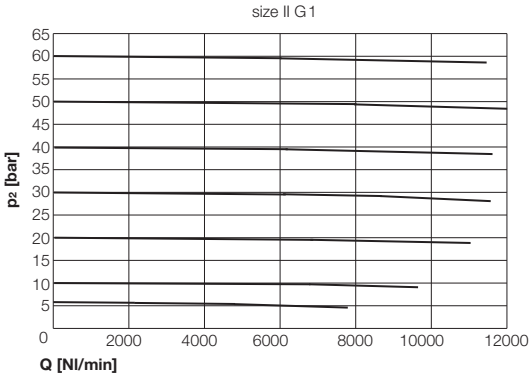

Condensate drain valves see chapter 8
Fasteners and connecting elements see page 31

ООО "ПРОВЕРТ" www.prowert.ru info@prowert.ru +7 (495) 103 06 88

Microfilters - G 1/8 – G 3/8

Microborosilicate air filters are suitable for use in all situations in which the required purity of the compressed air is especially high. As the second stage after the standard filter they remove almost without residue the smallest remaining particles of water, oil or dirt to 99,9999 % (for 0,01 µm). Residual oil content 0,01 ppm.
Flow passes from inside to outside. Replacement after 6 months.
Optional with bowl protection or metal bowl. Port size G 1/8 to G 3/8.

Size	Order No. Connection threads G 1/8*	G 1/4*	G 3/8
With plastic bowl and manually operated drain valve			
small	**403.21***	**403.22***	**403.23**
With plastic bowl and semi-automatic drain valve			
small	**403.521***	**403.522***	**403.523**
With plastic bowl and external automatic drain valve (max. 16bar)			
small	**403.121***	**403.122***	**403.123**

* inlet and outlet reduced (reductions added loosely, see page 32)

Order key for additional options:

403.xx**x**

M – metal bowl
S – bowl protection

for example:
403.21** with **bowl protection** = 403.21**S

Spare parts and accessories

		Order No. small
Bracket mounting for mounting on top of the housing		**322-24**
Bowl protection for plastic bow with bowl ring		**322-130**
Metal bowl with seals and	- manually operated drain valve	**324-101**
	- semi-automatic drain valve	**324-113**
	- external automatic drain valve A	**324-114**
Plastic bowl with seals and	- manually operated drain valve	**403-9**
	- semi-automatic drain valve	**403-26**
	- external automatic drain valve A	**403-30**
Bowl ring for plastic bowl and metal bowl		**287-25**
Sealing ring for all bowls		**287-6**
Microfilter element with seal, 0,01 µm (M10x1 - ø28x68)		**403-1**

Technical data

		Size small
Nominal rates of flow**		560Nl/min
Max. operating pressure (p_1)	- with plastic bowl	16bar
	- with metal bowl	25bar
Operating temperature	- with plastic bowl	0 °C up to +50 °C
	- with metal bowl	0 °C up to +90 °C
Effective bowl volume		max. to microfilter element
Mounting position		vertical
Direction of flow		arrow
Nominal width		DN6
Nominal pressure (housing)		PN25
Weight		380g
Material	- seals	NBR
	- housing	zinc alloy
	- filter element	borosilicate glass microfiber
	- plastic bowl	polycarbonate

** measured at p_1 = 6bar and Δp = 0,2bar

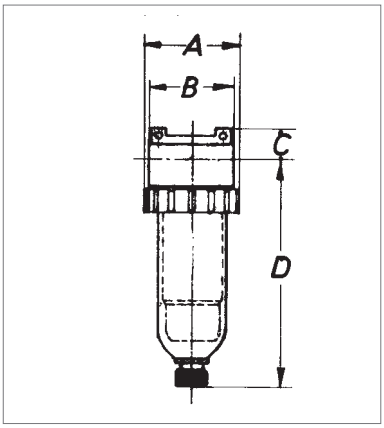

Dimensions [mm]

Size	small		
Connection threads	G 1/8*	G 1/4*	G 3/8
A	56	56	56
B	57	57	50
C	19	19	19
D**	135	135	135

* inlet and outled reduced (reductions added loosely)
** - with semi-automatic drain valve: +10mm
- with external automatic drain valve A: +90mm

Rates of flow

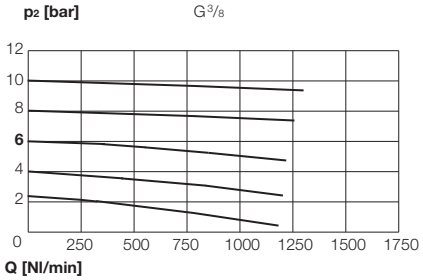

Condensate drain valve see chapter 8
Fasteners and connecting elements see page 31

ООО "ПРОВЕЛ" www.provel.ru info@provel.ru +7 (495) 234-0636

Microfilters - G 3/8 – G 1

403.36

Microborosilicate air filters are suitable for use in all situations in which the required purity of the compressed air is especially high. As the second stage after the standard filter they remove almost without residue the smallest remaining particles of water, oil or dirt to 99,9999 % (for 0,01 µm). Residual oil content 0,01 ppm. Flow passes from inside to outside. Replacement after 6 months.
Optional with bowl protection or metal bowl. Port size G 3/8 to G 1.

	Order No.			
	Connection threads			
Size	G 3/8*	G 1/2	G 3/4*	G 1
With plastic bowl and manually operated drain valve				
medium	**403.35***	**403.36**	**-**	**-**
large	**-**	**-**	**403.48***	**403.49**
With plastic bowl and semi-automatic drain valve				
medium	**403.535***	**403.536**	**-**	**-**
large	**-**	**-**	**403.548***	**403.549**
With plastic bowl and external automatic drain valve (max. 16 bar))				
medium	**403.135***	**403.136**	**-**	**-**
large	**-**	**-**	**403.148***	**403.149**

* inlet and outlet reduced (reductions added loosely, see page 32)

Order key for additional options:

403.xx**x**

M – metal bowl
S – bowl protection

for example:
403.35** with **bowl protection** = 403.35**S

Spare parts and accessories

		Order No. medium	Order No. large
Bracket mounting for mounting on top of the housing		**322-25**	**281-26**
Bowl protection for plastic bow		**298-8**	**281-24**
Bowl ring for bowl protection		**297-13**	**300-31**
Metal bowl with seals and	- manually operated drain valve	**324-109**	**322-125**
	- semi-automatic drain valve	**324-117**	**322-126**
	- external automatic drain valve A	**324-118**	**322-127**
Plastic bowl with seals and	- manually operated drain valve	**360-12**	**360-25****
	- semi-automatic drain valve	**403-28**	**403-29****
	- external automatic drain valve A	**403-32**	**403-33****
Bowl ring for plastic bowl and metal bowl		**297-2**	**279-2**
Sealing ring for all bowls		**297-10**	**279-9**
Microfilter element with seal, 0,01 µm (M23x1 – ø50x98)		**403-3**	**-**
0,01 µm (M35x1,5 – ø75x125)		**-**	**403-4**

** without seal

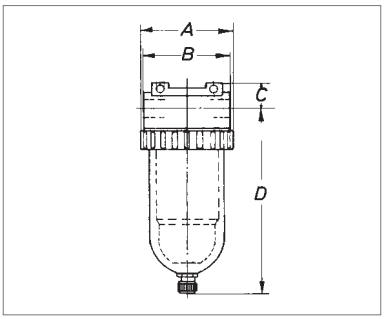

Technical data

		Size medium	Size large
Nominal rates of flow**		2000 Nl/min	4000 Nl/min
Max. operating pressure (p1	- with plastic bowl		16 bar
	- with metal bowl	25 bar	
Operating temperature	- with plastic bowl	0 °C up to +50 °C	
	- with metal bowl	0 °C up to +90 °C	
Effective bowl volume		max. to microfilter element	
Mounting position		vertical	
Direction of flow		arrow	
Nominal width		DN 15	DN 20
Nominal pressure (housing)		PN 25	PN 25
Weight		980 g	1900 g
Material	- seals	NBR	
	- housing	zinc alloy	aluminum
	- filter element	borosilicate glass microfiber	
	- plastic bowl	polycarbonate	

** measured at p_1 = 6 bar and Δp = 0,2 bar

Dimensions [mm]

Size	medium		large	
Connection threads	G 3/8*	G 1/2	G 3/4*	G 1
A	87	87	133	133
B	88	80	134	120
C	24	24	36	36
D**	172	172	206	206

* inlet and outled reduced (reductions added loosely)
** - with semi-automatic drain valve: +10 mm
- with external automatic drain valve A: +90 mm

Rates of flow

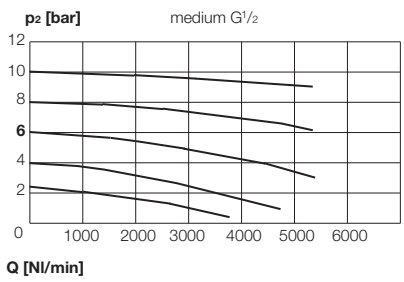

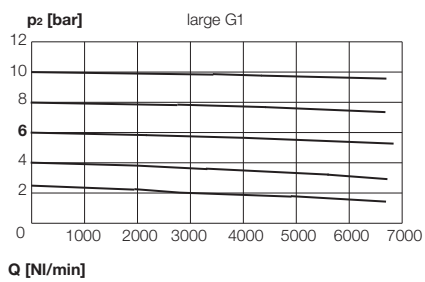

Condensate drain valves see chapter 8
Fasteners and connecting elements see page 31

ООО "ПРОВЕРТ" www.prowert.ru info@prowert.ru +7 (495) 103 06 88

Microfilters - G1 1/2 – G2

Microborosilicate air filters are suitable for use in all situations in which the required purity of the compressed air is especially high. As the second stage after the standard filter they remove almost without residue the smallest remaining particles of water, oil or dirt to 99,9999 % (for 0,01 µm). Residual oil content 0,01 ppm.
Flow passes from inside to outside. Replacement after 6 months.
Optional with bowl protection or metal bowl. Port size G1 1/2 to G2.

Size	Order No. Connection threads G1 1/2*	G2
With plastic bowl and manually operated drain valve		
super	**403.511***	**403.512**
With plastic bowl and semi-automatic drain valve		
super	**403.5511***	**403.5512**
With plastic bowl and external automatic drain valve (max. 16 bar)		
super	**403.1511***	**403.1512**

* inlet and outlet reduced (reductions added loosely, see page 32)

Order key for additional options:

403.xxx**x**

M – metal bowl
S – bowl protection

for example:
403.512 *with* ***metal bowl*** *= 403.512**M***

Spare parts and accessories

		Order No. super
Bracket mounting for mounting on top of the housing		**457-12**
Bowl protection for plastic bow		**281-24**
Bowl ring for bowl protection		**300-31**
Metal bowl with seals and	- manually operated drain valve	**322-125**
	- semi-automatic drain valve	**322-126**
	- external automatic drain valve A	**322-127**
Plastic bowl with seals and	- manually operated drain valve	**322-122**
	- semi-automatic drain valve	**322-123**
	- external automatic drain valve A	**322-124**
Bowl ring for plastic bowl and metal bowl		**279-2**
Sealing ring for all bowls		**279-9**
Microfilter element with seal, 0,01 µm (ø63x115)		**454-17**

Technical data

		Size super
Nominal rates of flow**		7000 Nl/min
Max. operating pressure (p_1)	- with plastic bowl	16 bar
	- with metal bowl	25 bar
Operating temperature	- with plastic bowl	0 °C up up to +50 °C
	- with metal bowl	0 °C up up to +90 °C
Effective bowl volume		max. to microfilter element
Mounting position		vertical
Direction of flow		arrow
Nominal width		DN50
Nominal pressure (housing)		PN25
Weight		5400 g
Material	- seals	NBR
	- housing	aluminum
	- filter element	borosilicate glass microfiber
	- plastic bowl	polycarbonate

** measured at p_1 = 6 bar and Δp = 0,2 bar

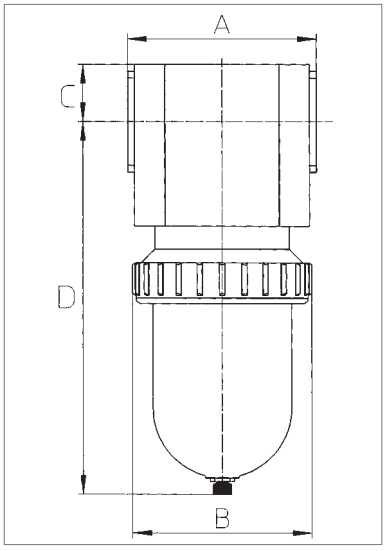

Dimensions [mm]

Size	super	
Connection threads	G1 1/2*	G2
A	140	140
B	133	133
C	42	42
D**	330	330

* inlet and outled reduced (reductions added loosely)
** - with semi-automatic drain valve: +10 mm
- with external automatic drain valve A: +90 mm

Condensate drain valve see chapter 8
Fasteners and connecting elements see page 31

ООО "ПРОВЕЛ" www.provel.ru info@provel.ru +7 (495) 234-0636

Microfilters 40 bar - G 3/8 – G 2

Microborosilicate air filters are suitable for use in all situations in which the required purity of the compressed air is especially high. As the second stage after the standard filter they remove almost without residue the smallest remaining particles of water, oil or dirt to 99,9999 % (for 0,01 µm). Residual oil content 0,01 ppm. Compressed air filter in a compact design. The filter element with a pore size lower than 0,01 µm are of borosilicate filter with supporting casing made of stainless steel (V2A) and foamed plastic cover. Flow passes from inside to outside. Replacement after 6 months. Housing made of aluminum (black anodized). Bowl of brass. Manually operated drain (Draining under pressure only possible until 25 bar!). Test certificate for pressure bowl included. Port size G 3/8 to G 2.

	Order No.					
	Connection threads					
Size	G 3/8*	G 1/2	G 3/4*	G 1	G 1 1/2*	G 2
I	**445.115***	**445.116**	-	-	-	-
II	-	-	**445.108***	**445.109**	-	-
super	-	-	-	-	**454.511***	**454.512**

* inlet and outlet reduced (reductions added loosely, see page 32)

Spare parts and accessories

	Order No.		
	Size I	Size II	Size super
Bracket mounting for mounting on top of the housing	**445-39**	**445-28**	**429-27**
Microfilter element with seal, 0,01 µm	**448-8**	**403-3**	**454-17**
Manual drain valves for metal bowls	**275-41*****	**275-41*****	**275-41*****

*** draining under pressure only possible until 25 bar!

For maximum working life we recooend using a normal filter 60 bar as first stage!

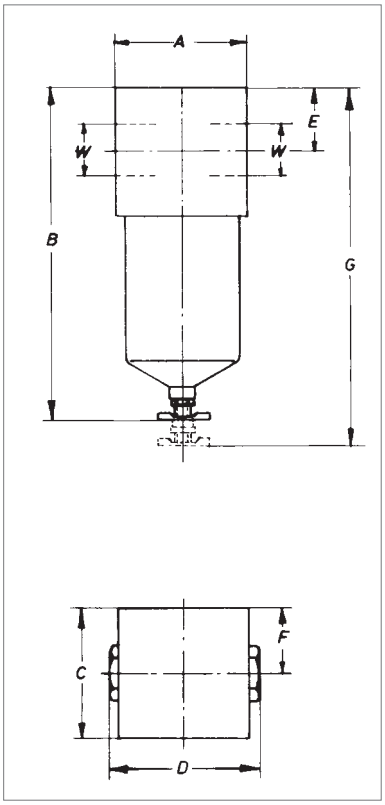

Technical data

	Size I	Size II	Size super
Nominal rates of flow**	2000 Nl/min	3000 Nl/min	7000 Nl/min
Max. operating pressure (p_1)	40 bar (PN 40)		
Operating temperature	0 °C up to +90 °C		
Effective bowl volume	max. to microfilter element		
Mounting position	vertical		
Direction of flow	arrow		
Nominal width	DN 15	DN 20	DN 50
Weight 1220 g	2000 g	5800 g	
Material - seals	NBR		
- housing	aluminum		
- metal bowl	brass	brass	aluminum
- filter element	borosilicate glass microfiber		

** measured at p_1 = 6 bar and Δp = 0,2 bar

Dimensions [mm]

Size	**I**		**II**		**super**	
Connection threads	G 3/8*	G 1/2	G 3/4*	G 1	G 1 1/2*	G 2
A	65	65	80	80	140	140
B	200	200	210	210	285	285
C	65	65	80	80	120	120
D	70	65	92	80	160	140
E	32	32	40	40	42,5	42,5
F	31	31	40	40	70	70
G**	250	250	285	285	350	350

* inlet and outled reduced (reductions added loosely)
** space required to change element.

Rates of flow

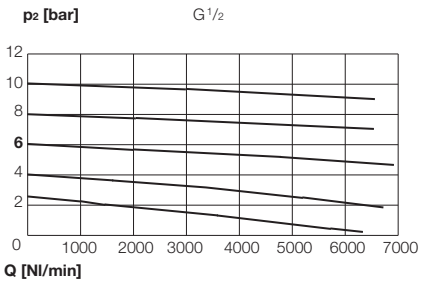

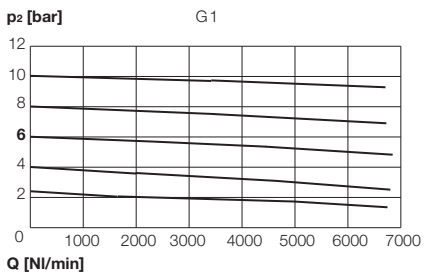

Fasteners and connecting elements see page 31

000 "ЭЛЕКТРОПРИВОД" www.privod.ru info@privod.ru +7 (495) 790 63 63

Microfilters 60 bar - G 3/8 – G 1

Microborosilicate air filters are suitable for use in all situations in which the required purity of the compressed air is especially high. As the second stage after the standard filter they remove almost without residue the smallest remaining particles of water, oil or dirt to 99,9999 % (for 0,01 µm). Residual oil content 0,01 ppm. Compressed air filter in a compact design. The filter element with a pore size lower than 0,01 µm are of borosilicate filter with supporting casing made of stainless steel (V2A) and foamed plastic cover. Flow passes from inside to outside. Replacement after 6 months. Housing made of aluminum (black anodized). Bowl of brass. Manually operated drain (Draining under pressure only possible until 25 bar!). Test certificate for pressure bowl included. Port size G 3/8 to G 1.

475.109

	Order No.			
	Connection threads			
Size	G 3/8*	G 1/2	G 3/4*	G 1
I	**475.115***	**475.116**	**-**	**-**
II	**-**	**-**	**475.108***	**475.109**

* inlet and outlet reduced (reductions added loosely, see page 32)

Spare parts and accessories

	Order No	
	Size I	Size II
Bracket mounting for mounting on top of the housing	**445-39**	**445-28**
Microfilter element with seal, 0,01 µm	**448-8**	**403-3**
Manual drain valves for metal bowls	**275-41*** **	**275-41*** **

*** draining under pressure only possible until 25 bar!

For maximum working life we recooend using a normal filter 60 bar as first stage!

Technical Data

	BG I	BG II
Nominal rates of flow**	2000 Nl/min	3000 Nl/min
Max. operating pressure (p_1)	60 bar (PN 60)	
Operating temperature	0 °C up to +90 °C	
Effective bowl volume	max. to microfilter element	
Mounting position	vertical	
Direction of flow	arrow	
Nominal width	DN15	DN20
Weight	1400 g	3000 g
Material - seals	NBR	
- housing	aluminum	
- metal bowl	brass	
- filter element	borosilicate glass microfiber	

** measured at p_1 = 6 bar and Δp = 0,2 bar

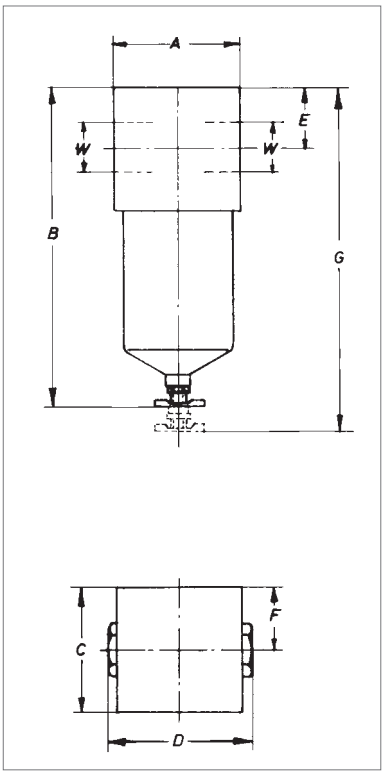

Dimensions [mm]

Size	I		II	
Connection threads	G 3/8*	G 1/2	G 3/4*	G 1
A	65	65	80	80
B	185	185	200	200
C	65	65	80	80
D	70	65	92	80
E	25	25	30	30
F	33	33	40	40
G**	205	205	285	285

* inlet and outled reduced (reductions added loosely)
** space required to change element.

Rates of flow

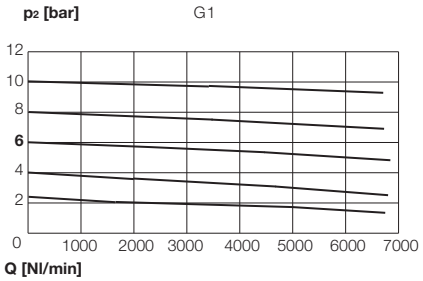

Fasteners and connecting elements see page 31

OOO "IPCEFT" www.prowett.ru info@prowett.ru +7 (495) 104-05-88

Small pressure regulators - G 1/4

301.223

Pressure regulators regulate the system pressure (p_1) in a compressed air system to the working pressure (p_2) and keep this pressure, regardless of pressure fluctuations and air consumption, largely constant. The excess pressure valve (secondary venting) allows a reduction of the secondary pressure (p_2) (= exhaust) without air extraction. At the same time compressed air escapes into the atmosphere when the pressure on the secondary side exceeds the set value.
Small pressure regulator (diaphragm type) in round shape. Typically ranges p_2 von 0,2-3, 0,5-6 and 10 bar.
Operation by handwheel, lockable. Gauges mounted on both sides. Panel or bracket mounting if desired.
Connecting thread G 1/4.
Note: To avoid losses should be a prefilter.
Also suitable for use with neutral and non-toxic gases!

Standard version:

Control range 0,5-10 bar, with gauge

Connection thread	Order No.
G 1/4	301.223

Order key for all variants:

301.xxx

- **1** – 0,2 - 3 bar
- **2** – 0,5 - 6 bar
- **3** – 0,5 - 10 bar

control range (p_2)

- **2** – G 1/4 — *connection thread*
- **2** – with gauge
- **4** – without gauge

for example:
***301.223** – but **without gauge** and*
0,5 - 6 bar = 301.422

Spare parts and accessories

			Order No.
Bracket mounting for mounting top at cover			**443-36**
Panel mounting panel thread M 30 x 1,5			**381-32**
Gauge horizontal, ø 40	display range:	0 - 4 bar *(for p_2 to 3 bar)*	**709**
		0 - 6 bar *(for p_2 to 3 bar)*	**714**
		0 - 10 bar *(for p_2 to 6 bar)*	**723**
		0 - 16 bar *(for p_2 to 10 bar)*	**734**
Seal cone complete			**301-3**
Diaphragm complete			**301-6**

Gauges see chapter 10, page 53 seq.

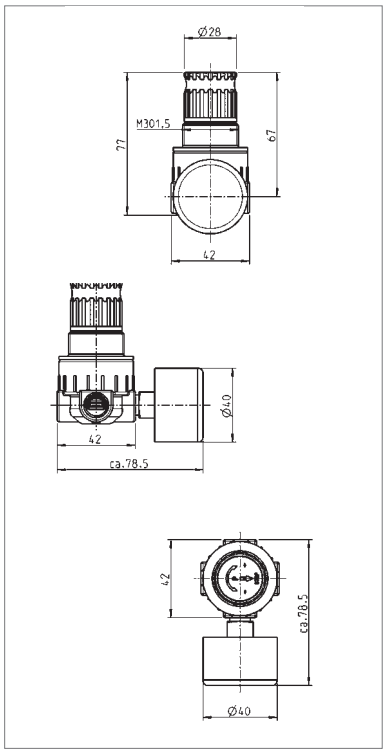

Technical data

Nominal rates of flow*		600 Nl/min
Max. operating pressure (p_1)		16 bar bei max. +50 °C (122 °F)
Operating temperature		-10 °C up to +90 °C
Mounting position		any
Direction of flow		arrow
Nominal width		DN 6
Dependence upon supply pressure		< 3 %
Reversing control hysteresis		~ 1 bar
Weight		300 g
Material	- housing	aluminum
	- cover	PA6-GF30
	- handwheel	POM
	- Guide pin, disc	PA
	- cone, diaphragm	NBR

* measured at p_1 = 10 bar, p_2 = 6 bar and Δp = 1 bar

Fasteners and connecting elements see page 31

ООО "ПРОВЕРТ" www.prowert.ru info@prowert.ru +7 (495) 103 06 88

Pressure regulators - G 1/8 – G 1/2

Pressure regulators regulate the system pressure (p_1) in a compressed air system to the working pressure (p_2) and keep this pressure, regardless of pressure fluctuations and air consumption, largely constant. The excess pressure valve (secondary venting) allows a reduction of the secondary pressure (p_2) (= exhaust) without air extraction. At the same time compressed air escapes into the atmosphere when the pressure on the secondary side exceeds the set value. Working pressure ranges from 0,5 to 3/6/10 and 16 bar. Operation by means of a toggle or handwheel. Special models (for example, without secondary air exhaust) upon request. Gauge can be mounted on either side. Panel or bracket mounting if desired. Port sizes G 1/8 to G 1/2.
Note: To avoid losses should be a air filter. **Also suitable for use with neutral and non-toxic gases!**

323.333

Standard versions:

Control range 0,5 - 10 bar, with toggle, with gauge

Size	Order No. Connection threads G 1/8*	G 1/4*	G 3/8	G 1/2
small	**323.313***	**323.323***	**323.333**	-
intermediate	**280.313***	**280.323***	**280.333**	-
medium	-	-	**280.353***	**280.363**

* inlet and outlet reduced (reductions added loosely, see page 32)

Order key for all variants:

323.xxx

- **1** – 0,5 - 3 bar
- ***2*** – 0,5 - 6 bar
- **3** – 0,5 - 10 bar
- **4** – 0,5 - 16 bar

control range

- **1** – G 1/8*
- **2** – G 1/4*
- **3** – G 3/8 *size small, intermediate*
- **5** – G 3/8* *size medium*
- **6** – G 1/2

connection threads

- **2** – handwheel with gauge
- **3** – toggle with gauge
- **4** – handwheel without gauge
- **5** – toggle without gauge

for example:
323.323 *– but* ***without gauge*** *and*
0,5 - 16 bar = 323.524

Spare parts and accessories

		Order No. small	intermediate	medium
Bracket mounting for fixing on lid		**323-68**	**280-134**	**280-132**
Panel mounting panel thread: M14x1 (small), M20x1,5 (intermediate), M22x1 (medium)		**323-69**	**323-66**	**280-133**
Gauge horizontal display range:	0 - 6 bar *(for p_2 to 3 bar)*	**42**	**213**	**213**
ø50 (size small)	0 - 10 bar *(for p_2 to 6 bar)*	**55**	**214**	**214**
ø63 (size intermediate, medium)	0 - 16 bar *(for p_2 to 10 bar)*	**85**	**215**	**215**
	0 - 25 bar *(for p_2 to 16 bar)*	**96**	**216**	**216**
Seal cone complete		**323-119**	**406-37**	**280-220**
Diaphragm complete		**323-152**	**280-223**	**280-221**

Gauges see chapter 10, page 53 seq.

Technical data

	Size small	Size intermediate	Size medium
Nominal rates of flow**	1000 Nl/min	2000 Nl/min	2670 Nl/min
Max. operating pressure (p_1)		25 bar (PN 25)	
Operating temperature		-10 °C up to +90 °C	
Mounting position		any	
Direction of flow		arrow	
Nominal width	DN 6	DN 10	DN 15
Dependence upon supply pressure	< 3 %	< 2 %	< 2 %
Reversing control hysteresis		~ 1 bar	
Weight	620 g	1150 g	1350 g
Material - diaphragm, seals		NBR	
- housing/spring cover		zinc alloy	

** measured at p_1 = 8 bar, p_2 = 6 bar and Δp = 1 bar

Rates of flow $p_1 = p_2 + 2$ bar

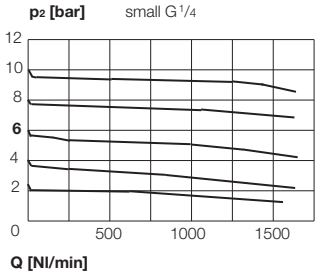

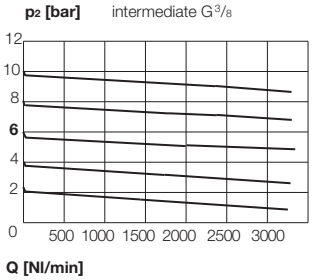

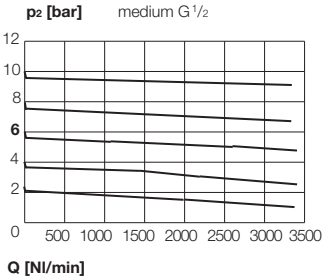

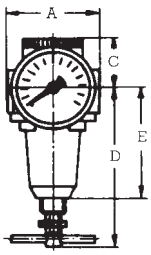

Dimension [mm]

Size	Connection threads	A	C	D	E
small	G 1/8*, G 1/4*	61	30	100	67
	G 3/8	54	30	100	67
intermediate	G 1/8*, G 1/4*	77	33	127	78
	G 3/8*	70	33	127	78
medium	G 3/8*	90	34	136	85
	G 1/2	82	34	136	85

* inlet and outled reduced (reductions added loosely)

Fasteners and connecting elements see page 31

ООО "ПРОВЕЛ" www.provel.ru info@provel.ru +7 (495) 234-0636

Pressure regulators - G 3/4 – G 1 1/2

406.xxx compact

280.xxx large/max

Pressure regulators regulate the system pressure (p_1) in a compressed air system to the working pressure (p_2) and keep this pressure, regardless of pressure fluctuations and air consumption, largely constant. The excess pressure valve (secondary venting) allows a reduction of the secondary pressure (p_2) (= exhaust) without air extraction. At the same time compressed air escapes into the atmosphere when the pressure on the secondary side exceeds the set value. Working pressure ranges from 0,5 - 3/6/10/16 and 25 bar. Operation by means of a toggle or handwheel (size large + max for 16 and 25 bar with hexagon screw sw 19. Special models (for example, without secondary air exhaust) upon request. Gauge can be mounted on either side. Panel or bracket mounting if desired. Port sizes G 3/4 to G 1 1/2.

Note: To avoid losses should be a air filter. **Also suitable for use with neutral and non-toxic gases!**

Standard versions:

Control range 0,5 - 10 bar, with gauge

Size	Order No. Connection threads G 3/4*	G 1	G 1 1/4*	G 1 1/2
compact	**406.283***	**406.293**	-	-
large	**280.383***	**280.393**	-	-
max	-	-	**280.3103***	**280.3113**

* inlet and outlet reduced (reductions added loosely, see page 32)

Order key for all variants:

Size compact

406.xxx

- **1** – 0,5 - 3 bar
- **2** – 0,5 - 6 bar
- **3** – 0,5 - 10 bar
- **4** – 0,5 - 16 bar

→ *control range (p_2)*

- **8** – G 3/4*
- **9** – G 1

→ *connection threads*

- **2** – handwheel with gauge (to 10 bar)
- **3** – toggle with gauge
- **4** – handwheel without gauge (to 10 bar)
- **6** – toggle without gauge

Size large/max

280.xxxx

- **1** – 0,5 - 3 bar
- **2** – 0,5 - 6 bar
- **3** – 0,5 - 10 bar
- **4** – 0,5 - 16 bar
- **5** – 0,5 - 25 bar

→ *control range (p_2)*

- **8** – G 3/4*
- **9** – G 1
- **10** – G 1 1/4*
- **11** – G 1 1/2

→ *connection threads*

- **3** – toggle*** with gauge
- **5** – toggle*** without gauge

*** 16+25 bar with hexagon screw

for example:

280.3113 *– but* ***without*** *gauge and* ***0,5-25 bar = 280.5115***

Spare parts and accessories

		Order No. compact	large	max
Bracket mounting for fixing on lid/attachment to the cover fixing screws		**406-17**	**280-239**	**280-239**
Panel mounting panel thread M28x1,5		**406-18**	-	-
Gauge horizontal, ø63 display range:	0 - 6 bar *(for p_2 to 3 bar)*	**213**	**213**	**213**
	0 - 10 bar *(for p_2 to 6 bar)*	**214**	**214**	**214**
	0 - 16 bar *(for p_2 to 10 bar)*	**215**	**215**	**215**
	0 - 25 bar *(for p_2 to 16 bar)*	**216**	**216**	**216**
	0 - 40 bar *(für p_2 bis 25 bar)*	-	**217**	**217**
Seal cone complete		**406-32**	**280-218**	**280-235**
Diaphragm complete		**406-50**	**280-219**	**280-219**

Gauges see chapter 10, page 53 seq.

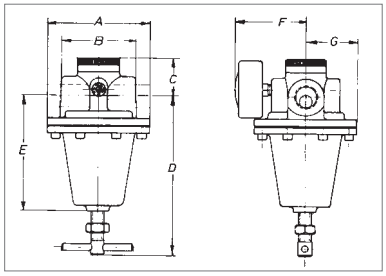

Dimensions [mm]

Size	compact G 3/4*,G1		large G 3/4*, G 1		max G 1 1/4*,G 1 1/2	
A	-	-	116	116	116	116
B	96	90	95	83	128	114
C	47	47	41	41	50	50
D	139	139	175	175	190	190
E	89	89	-	-	-	-
F	77	77	80	80	80	80
G	39	39	58	58	58	58

*inlet and outled reduced (reductions added loosely)

Technical data

	Size compact	Size large	Size max
Nominal rates of flow**	5330 Nl/min	7830 Nl/min	12160 Nl/min
Max. operating pressure (p_1)	25 bar (PN 25)	40 bar (PN 40)	40 bar (PN 40)
Operating temperature	-10 °C up to +90 °C		
Mounting position	any		
Direction of flow	arrow		
Nominal width	DN 20	DN 20	DN 25
Dependence upon supply pressure	< 3 %	< 1,5 %	< 1,5 %
Reversing control hysteresis	~ 1 bar		
Weight	2050 g	3480 g	5260 g
Material - diaphragm		NBR	
- seals		NBR	
- housing/spring cover	zinc alloy	brass	brass

** measured at p_1 = 8 bar, p_2 = 6 bar and Δp = 1 bar

Rates of flow $p_1 = p_2 + 2$ bar

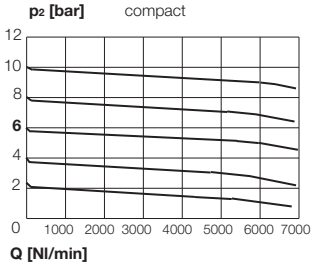

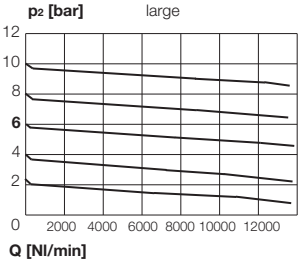

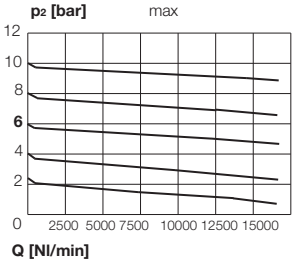

Fasteners and connecting elements see page 31

ООО "ПКФ ЕВО" www.pnevent.ru info@pnevent.ru +7 (495) 780-0628

Pressure regulators - G1 1/2 – G2

Pressure regulators regulate the system pressure (p_1) in a compressed air system to the working pressure (p_2) and keep this pressure, regardless of pressure fluctuations and air consumption, largely constant.
Pressure regulator (diaphragm type) with servomechanism. Port sizes G1 1/2 to G2. The excess pressure valve (secondary venting) allows a reduction of the secondary pressure (p_2) (= exhaust) without air extraction. Working pressure ranges from 0,5 - 6, 10, 16 and 25 bar. Two gauges (inlet and outlet pressure) can be mounted on either side. Panel or bracket mounting if desired.
Note: To avoid losses should be a air filter. **Also suitable for use with neutral and non-toxic gases!**

Remote control on request!

Standard versions:

Control range (for p_2) 0,5-10 bar, with gauge	Order No.	
	Connection threads	
Size	G1 1/2*	G2
super	**417.2113***	**417.2123**

* inlet and outlet reduced (reductions added loosely, see page 32)

Order key for all variants:

417.xxxx

- **2** – 0,5 - 6 bar
- **3** – 0,5 - 10 bar
- **4** – 0,5 - 16 bar
- **5** – 0,5 - 25 bar

— *control range (p_2)*

- **11** – G1 1/2*
- **12** – G2

— *connection threads*

- **2** – with 2 gauges (for p_1 and p_2)
- **4** – without gauges

for example:
417.2113** – but **without gauges** and **0,5 - 16 bar = 417.4114

Spare parts and accessories

			Order No.	
			size super	
Bracket mounting for fixing on the housing			**417-47**	
Gauges	display range:	0 - 10 bar *(for p_2 to 6 bar)*	**214**	
horizontal, ø63,		0 - 16 bar *(for p_2 to 10 bar)*	**215**	
		0 - 25 bar *(for p_2 to 16 bar)*	**216**	
		0 - 40 bar *(for p_2 to 25 bar)*	**217**	
		0 - 60 bar *(for p_1)*	**218**	
			old model 2 diaphragm	new model 1 diaphragm
Spare parts kit (seals, diaphragms, sealing cone)			**417-54**	**417-75**
Seal cone complete			**417-15**	**417-67**
Diaphragm complete			**417-26**	**417-66**

Gauges see chapter 10, page 53 seq.

Technical data

		Size super
Nominal rates of flow**		48000 Nl/min
Max. operating pressure (p_1)		40 bar (PN 40)
Control range (for p_2)		0,5 to 6, 10, 16 and 25 bar
Operating temperature		-10 °C up to +90 °C
Mounting position		any
Direction of flow		arrow
Nominal width		DN 50
Dependence upon supply pressure		< 1 %
Reversing control hysteresis		~ 0,5 bar
Weight		5500 g
Material	- diaphragm/seals	NBR
	- housing	aluminum alloy

** measured at p_1 = 10 bar, p_2 = 8 bar and Δp = 1 bar

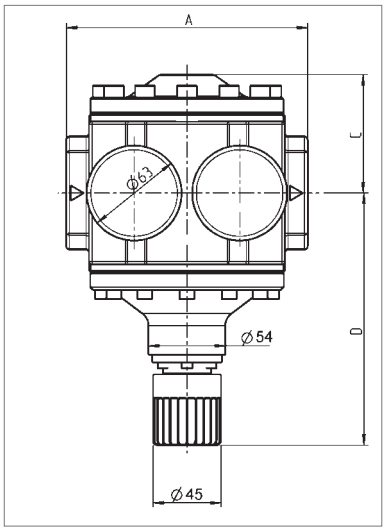

Rates of flow $p_1 = p_2 + 2$ bar

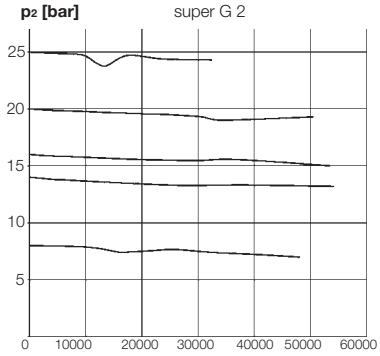

Dimensions [mm]

Size	super	
Connection threads	G1 1/2*	G2
A	180	160
C	78	78
D	170	170

* inlet and outled reduced (reductions added loosely)

Fasteners and connecting elements see page 31

ООО "ПРОВЕЛ" www.provel.ru info@provel.ru +7 (495) 234-0636

Pressure regulators 40 bar - G 1/4 + G 1/2

Pressure regulators regulate the system pressure (p_1) in a compressed air system to the working pressure (p_2) and keep this pressure, regardless of pressure fluctuations and air consumption, largely constant.
Pressure regulator (diaphragm type) with servomechanism. Port sizes G 1/4 to G 1/2. The excess pressure valve (secondary venting) allows a reduction of the secondary pressure (p_2) (= exhaust) without air extraction. Working pressure ranges from 0,5 to 3, 6, 10, 16 and 25 bar. Adjustment by means of a locknut. Gauge can be mounted on either side. Panel or bracket mounting if desired.
Note: To avoid losses should be a air filter. **Also suitable for use with neutral and non-toxic gases!**

Standard versions:

Control range 0,5 - 10 bar, with gauge

Size	Order No. Connection threads G 1/4	G 1/2
small	**286.323**	**-**
mediuml	**-**	**274.663**

Order key for all variants:

286/274.xxx

- **1** – 0,5 - 3 bar
- **2** – 0,5 - 6 bar
- **3** – 0,5 - 10 bar
- **4** – 0,5 - 16 bar
- **5** – 0,5 - 25 bar (not size small)

control range (p_2)

- **2** – G 1/4
- **6** – G 1/2

connection threads

- **3** – with gauge (for size small except 25 bar)
- **6** – mit with gauge (for size medium)
- **4** – without gauge

for example:
274.663 *– but* ***without gauge*** *and* ***0,5 - 16 bar = 274.464***

Spare parts and accessories

			Order No. small	medium
Bracket mounting for fixing on lid			**286-88**	**274-48**
Panel mounting			**286-89**	**274-49**
Panel thread M 14 x 1 (size small), M 22 x 1 (size medium)				
Gauge horizontal,	display range:	0 - 6 bar *(for p_2 to 3 bar)*	**714**	**213**
ø 40 (size small)		0 - 10 bar *(for p_2 to 6 bar)*	**723**	**214**
ø 63 (size medium)		0 - 16 bar *(for p_2 to 10 bar)*	**734**	**215**
		0 - 25 bar *(for p_2 to 16 bar)*	**745**	**216**
		0 - 40 bar *(for p_2 to 25 bar)*	**-**	**217**
Seal cone complete			**286-120**	**274-75**
Diaphragm complete	control range (for p_2):	0 - 3 bar	**286-126**	**274-65**
		0 - 10 bar	**286-126**	**274-66**
		0 - 25 bar	**286-126**	**274-67**

Gauges see chapter 10, page 53 seq.

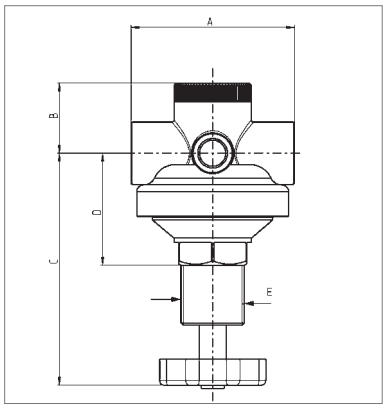

Technical data

	Size small	Size medium
Nominal rates of flow*	430 Nl/min	1250 Nl/min
Max. operating pressure (p_1)	40 bar (PN 40)	40 bar (PN 40)
Operating temperature	-10 °C up to +90 °C	-10 °C up to +90 °C
Control range (p_2)	0,5 to 3, 6, 10, 16 and 25 bar	0,5 bis 3, 6, 10, 16 und 25 bar
Mounting position	any	any
Direction of flow	arrow	arrow
Nominal width	DN 6	DN 12
Dependence upon supply pressure	< 10 %	< 4 %
Reversing control hysteresis	~ 1 bar	~ 1 bar
Weight	390 g	1000 g
Material - diaphragm / seals	NBR	NBR
- housing / spring cover	brass	brass

* measured at p_1 = 8 bar, p_2 = 6 bar and Δp = 1 bar

Dimensions [mm]

Size	small	medium
Connection threads	G 1/4	G 1/2
A	45	72
B	23	30
C	81	115
D	35	52
E	M 20 x 1,5	M 28 x 1,5

Rates of flow $p_1 = p_2 + 2$ bar

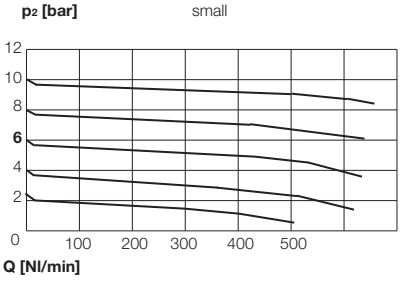

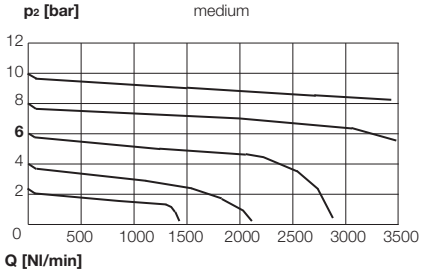

Fasteners and connecting elements see page 31

ООО "ПКФ ЕВРО-ПРОМ" www.pkfevrent.ru info@pkfevrent.ru +7 (495) 780-02-68

High pressure regulators 60 bar - G 1/4 – G 1

Pressure regulators regulate the system pressure (p_1) in a compressed air system to the working pressure (p_2) and keep this pressure, regardless of pressure fluctuations and air consumption, largely constant. Pressure regulator (piston type). Secondary air exhaust (relieving) and almost complete independence of primary are provided. Working pressure ranges p_2 at 0,5 to 12, 20, 35 and 50 bar. Setting in size I and II with handwheel (35/50 bar with toggle), in size III with toggle (50 bar with hexagon screw). Gauge can be mounted on either side. Panel or bracket mounting if desired.
Note: To avoid losses should be a air filter. **Also suitable for use with neutral and non-toxic gases!**

302.333

Standard versions:

Control range 0,5-10 bar, with gauge

Size	Order No. connection threads G 1/4*	G 3/8	G 1/2	G 1
I	**302.323***	**302.333**	-	-
II	-	-	**302.366**	-
III	-	-	-	**302.393**

* inlet and outlet reduced (reductions added loosely, see page 32)

Order key for all variants:

302.xxx

- **3** – 0,5 - 12 bar
- **4** – 1,0 - 20 bar
- **5** – 2,0 - 35 bar
- **6** – 3,0 - 50 bar

control range (p_2)

- **2** – G 1/4* *BG I*
- **3** – G 3/8 *BG I*
- **6** – G 1/2 *BG II*
- **9** – G 1 *BG III*

connection threads

- **3** – with gauge
- **5** – without gauge

for example:
302.333** – but **without gauges
*and **2,0 - 35 bar = 302.535***

302.393

Spare parts and accessories

		Order No. Size I + II	Size II
Bracket mounting for fixing on lid / attachment to the cover fixing screws		**274-48**	**302-19**
Gauge horizontal, ø63 display range:	0 - 16 bar *(for p_2 to 12 bar)*	**215**	**216**
	0 - 25 bar *(for p_2 to 20 bar)*	**216**	**217**
	0 - 40 bar *(for p_2 to 35 bar)*	**217**	**217**
	0 - 60 bar *(for p_2 to 50 bar)*	**218**	**218**
Seal cone complete		**406-37**	**302-6**

Gauges see chapter 10, page 53 seq.

Technical data

	Size I		Size II	Size III
Connection threads	G 1/4	G 3/8	G 1/2	G 1
Nominal rates of flow (Nl/min)*	1800	2200	3500	5000
Max. operating pressure (p_1)	60 bar (PN 60)			
Control range (p_2)	0,5 to 12, 20, 35, 16 and 50 bar			
Operating temperature	-10 °C up to +90 °C			
Mounting position	any			
Direction of flow	arrow			
Nominal width	DN 8	DN 10	DN 15	DN 20
Weight	1500 g	1500 g	1500 g	7100 g
Material - seals	NBR			
- housing	brass			

* measured at p_1 = 20 bar, p_2 = 10 bar and Δp = 4 bar

Size I

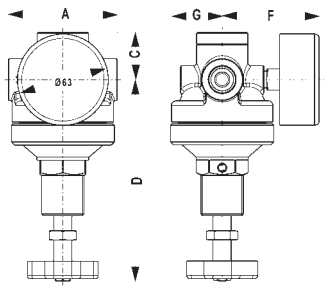

Dimensions [mm]

Size	I	II	III
Connection threads	G 1/4*, G 3/8	G 1/2	G 1
A	72	72	118
C	35	35	51
D	133	121	206
F	66	75	80
G	36	36	58

*inlet and outled reduced
(reductions added loosely)

Size II

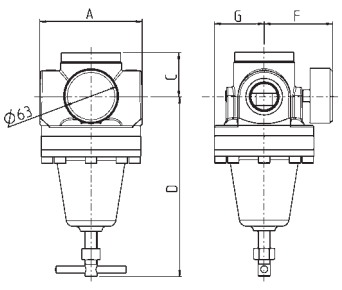

Fasteners and connecting elements see page 31

761.03.17.B.04/2015
3 Compressed Air Preparation - standard
17
ООО "ПРОВЕРТ" www.prowert.ru info@prowert.ru +7 (495) 103-05-88

Pressure line regulators - G 1/4

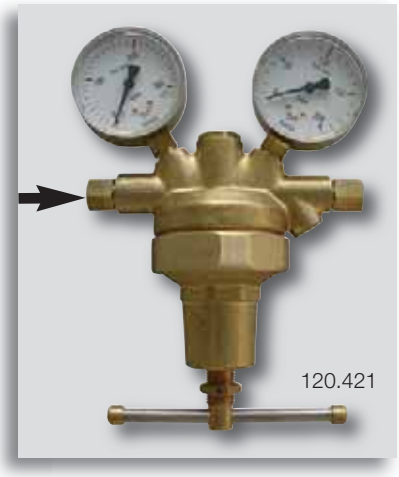

Line pressure regulator for up to max. 200 bar inlet pressure (max. Operating pressure p1). Output pressure (setting range p2) to max. 150 bar, depending on the model. Non-taxable. Connection thread G 1/4. Suitable for compressed air, nitrogen and other inert, compressed gases.

Pressure range	Adjustments	Order No. connection thread G 1/4
50 bar	handwheel	**120.420**
100 bar	toggle	**120.421**
150 bar	toggle	**120.422**

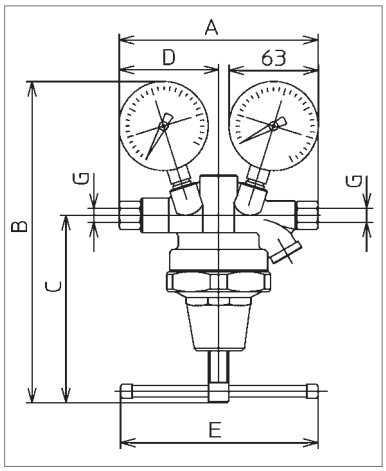

Technical data

Nominal rates of flow	50 bar = 2500 Nl/min
	100 bar = 2700 Nl/min
	150 bar = 2900 Nl/min
Size port	G 1/4 female thread on both sides
Gauge inlet	ø63, 0 - 200 bar
Gauge outlet	ø63, 0 - 50 bar, 100 bar, 200 bar
Max. operating pressure (p_1)	200 bar (PN 200)
Control range (p_2)	1 bis 50 bar, 100 bar, 150 bar
Operating temperature	-10 °C up to +90 °C
Mounting position	any
Direction of flow	left to right
Nominal width	DN 3
Over-pressure protection	blow-off valve
Adjustment	toggle (50 bar - handwheel)
Weight	2200 g
Material - seals	NBR
- housing, spring cover	brass

Gauges see chapter 10, page 53 seq.

Dimensions [mm]

Connection thread	G 1/4
A	150
B	215
C	130
D	160
E	130
G	G 1/4

Fasteners and connecting elements see page 31

ООО "ПРОВЕРТ" www.prowert.ru prog@prowert.ru +7 (495) 103 0638

Precision pressure regulators - G 1/4

Pressure regulators regulate the system pressure (p_1) in a compressed air system to the working pressure (p_2) and keep this pressure, regardless of pressure fluctuations and air consumption, largely constant.
Pressure regulator (diaphragm type) with low operating air consumption. Secondary air exhaust (relieving) practically without hysteresis. Working pressure ranges p_2 at 0,1 to 6 bar. Gauge can be mounted on either side. Adjustment by means of a locknut. Panel or bracket mounting if desired. Port sizes G 1/4.
Note: To avoid losses should be a air filter. **Also suitable for use with neutral and non-toxic gases!**

Control range 0,1 - 6 bar	Order No.
Execution Gauge	connection thread G 1/4*
with gauge	**435.222***
without gauge	**435.422***

* inlet and outlet reduced (reductions added loosely, see page 32)

Spare parts and accessories

	Order No.
Bracket mounting for fixing on lid	**280-132**
Bracket mounting panel thread M22x1	**280-133**
Gauge horizontal, ø63, display range 0 - 6 bar, fine scale (0,1 bar)	**257**
Seal cone complete	**435-16**
Diaphragm complete	**435-7**

Gauges see chapter 10, page 53 seq.

Technical data

Nominal rates of flow**	500 Nl/min
Max. operating pressure (p_1)	10 bar (PN 10)
Operating temperature	-10 °C up to +60 °C
Control range (p_2)	0,1 to 6 bar
Mounting position	any
Direction of flow	arrow
Nominal width	DN 4
Dependence upon supply pressure	< 3 %
Reversing control hysteresis	< 0,1 bar
Air consumption	< 2,5 l/min
Weight	1400 g
Material - diaphragm/seals	NBR
- housing/spring cover	zinc alloy

** measured at 2 - 6 bar, Δp = 1 bar

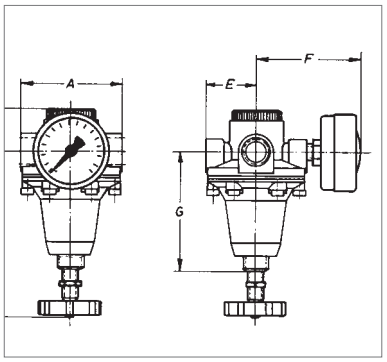

Dimensions [mm]

Connection thread	G 1/4*
A	82
C	34
D	132
E	41
F	80
G	85

*inlet and outled reduced
(reductions added loosely)

Fasteners and connecting elements see page 31

ООО "ПРОВЕЛ" www.provel.ru info@provel.ru +7 (495) 234-0636

Pressure regulators with internal gauge in setting knob

367.333

Pressure regulators regulate the system pressure (p_1) in a compressed air system to the working pressure (p_2) and keep this pressure, regardless of pressure fluctuations and air consumption, largely constant. Pressure regulator (diaphragm type), ideal for panel mounting. Port size G 3/8. Secondary air exhaust (relieving) and almost complete independence of primary pressure. Working pressure ranges from 0,5 to 3, 6, 10 and 16 bar.
Gauge integrated in setting handwheel. Panel mounting possible if desired.
Note: To avoid losses should be a air filter.

Standard versions:

Control range 0,5 - 10 bar

Connection thread	Order No.
G 3/8	**367.333**

Order key for all variants:

367.33x

- **1** – 0,5 - 3 bar
- **2** – 0,5 - 6 bar
- **3** – 0,5 - 10 bar
- **4** – 0,5 - 16 bar

control range (p_2)

for example:
367.333** – but **0,5 - 16 bar = 367.334

Spare parts and accessories

			Bestell-Nr.
Panel mounting panel thread M48 x 1,5			**367-33**
Pressure gauage	display range:	0 - 6 bar *(for p_2 to 3 bar)*	**673**
horizontal (M8x1)ø40		0 - 10 bar *(for p_2 to 6 bar)*	**674**
		0 - 16 bar *(for p_2 to 10 bar and 16 bar)*	**675**
Seal cone complete			**323-119**
Diaphragm complete			**367-88**

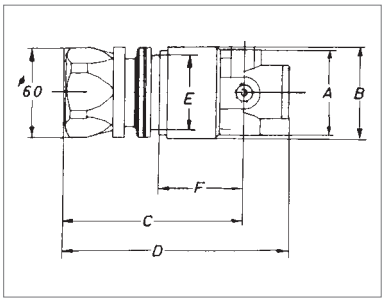

Technical data

Nominal rates of flow*	1000 Nl/min
Max. operating pressure (p_1)	25 bar (PN 25)
Outlet pressure range (p_2)	0,5 to 3, 6, 10 and 16 bar
Operating temperature	-10 °C up to +90 °C
Mounting position	any
Direction of flow	arrow
Nominal width	DN 10
Dependence upon supply pressure	< 3 %
Reversing control hysteresis	~ 1 bar
Weight	985 g
Material - diaphragm/seals	NBR
- housing	zinc alloy and aluminum

* measured at p_1 = 8 bar, p_2 = 6 bar and Δp = 1 bar

Dimensions [mm]

Connection thread	G 3/8
A	54
B	60
C	115
D	145
E	48
F	56

Rates of flow

$p_1 = p_2 + 2$ bar
G 3/8

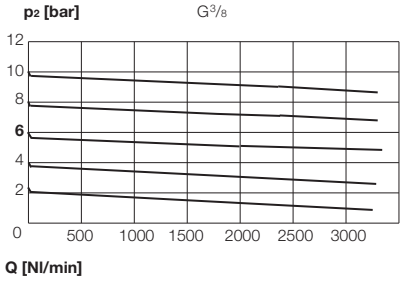

Fasteners and connecting elements see page 31

ООО "ПРОВЕРТ" www.prowert.ru prog@prowert.ru +7 (495) 103 06 33

Water pressure regulators - G 1/4 – G 1 1/2

Pressure regulators protect water installations against line pressures that are too high. When the specification are observed, these can also be applied in industrial and commercial sectors. Beim Einsatz werden Druckschwankungen vermieden und der Wasserverbrauch gesenkt. The set working pressure (p2) is kept constant at different inlet pressures. At the same flow noise can be reduced. Control range for p_2 from 0,5 - 6/10/16 and 25 bar. Gauge can be mounted on both sides. Handwheel/knob/screw with lock nut to be locked. Panel mounting and bracked kit optional available.

280.600

	Order No.			
	conection threads			
With gauge	G 1/4	G 1/2	G 1	G 1 1/2
Control range for p_2	small	medium	large	max
0,5- 6 bar	**286.599**	**274.599**	**280.599**	**280.1599**
0,5-10 bar	**286.600**	**274.600**	**280.600**	**280.1600**
0,5-16 bar	**286.601**	**274.601**	**280.601**	**280.1601**
0,5-25 bar	**286.602**	**274.602**	**280.602**	**280.1602***
Without gauge				
0,5- 6 bar	**286.399**	**274.399**	**280.399**	**280.1399**
0,5-10 bar	**286.400**	**274.400**	**280.400**	**280.1400**
0,5-16 bar	**286.401**	**274.401**	**280.401**	**280.1401**
0,5-25 bar	**286.402**	**274.402**	**280.402**	**280.1402***

* with adjustment screw

Spare parts and accessories

		Order No.			
		small	medium	large	max
Bracket mounting attachment to the cover fixing screws		**286-88**	**274-48**	**280-239**	**280-239**
Panel mounting Panel thread: M20x1,5 (size small), M28x1,5 (size medium)		**286-89**	**274-49**	**–**	**–**
Gauge horizontal,	display range:				
ø40 (size small)	0-10 bar *(for p_2 to 6bar)*	**723**	**214**	**214**	**214**
ø63 (size medium, large, max)	0-16 bar *(for p_2 to 10bar)*	**734**	**215**	**215**	**215**
	0-25 bar *(for p_2 to 16bar)*	**745**	**216**	**216**	**216**
	0-25 bar *(size small)* /40 bar *(for p_2 to 25bar)*	**745**	**217**	**217**	**217**
Seal cone complete		**286-124**	**274-82**	**280-171**	**280-172**
Diaphragm complete		**286-45**	**274-81**	**280-173**	**280-173**

Gauges see chapter 10, page 53 seq.

Technical data

	small	medium	large	max
Nominal rates of flow*	2,5 l/min	15 l/min	24 l/min	56 l/min
Max. operating pressure (p_1)	40 bar (PN 40)			
Operating temperature	+5 °C up to +90 °C			
Mounting position	any			
Direction of flow	arrow			
Nominal width	DN 6	DN 12	DN 20	DN 25
Regulation	handwheel	handwheel	toggle	toggle or adjustment screw
Reversing control hysteresis	~ 1 bar			
Weight	390 g	1000 g	3480 g	5260 g
Material - diaphragm/seals	NBR			
- housing	brass			

* measured at p_1 = 7 bar, p_2 = 6 bar and Δp = 1 bar

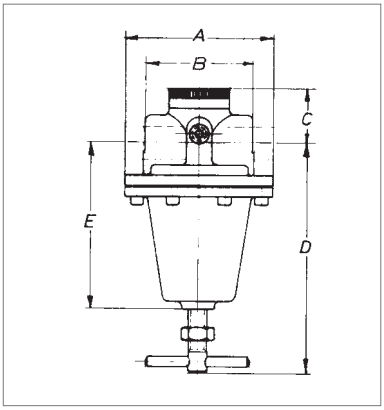

Dimensions [mm]

Size	small	medium	large	max
Connection threads	G 1/4	G 1/2	G 1	G 1 1/2
A	45	72	116	116
B	45	72	83	114
C	23	30	41	50
D**	81	115	175	190
E	56	76	125	140
F	50	55	80	80
G	18	36	58	58

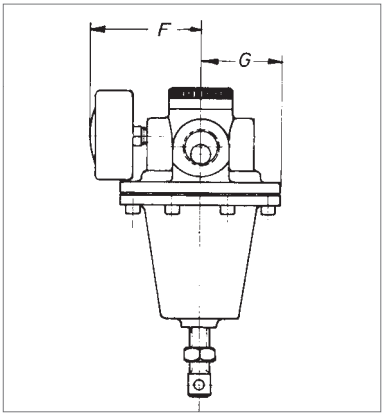

Fasteners and connecting elements see page 31

ООО "ПРОВЕЛ" www.provel.ru info@provel.ru +7 (495) 234-0636

Lubricators - G 1/8 – G 1/2

327.023

Air lubricators are used for metered enrichment of compressed air with finely atomized oil mist. A control valve causes the proportional flow rate of added oil.
Air lubricator straight through. More area oiler with proportional characteristic. Refilling oil while under pressure is possible. Needle valve for oil adjustment with high drop constancy for long periods of time. Plastic bowl (polycarbonate). Available as an option with bowl protection or metal bowl. Metal Oil regulating valve available on request. Port sizes G 1/8 to G 1/2.

With plastic bowl	Order No.			
	connection threads			
Size	G 1/8*	G 1/4*	G 3/8	G 1/2
small	**327.021***	**327.022***	**327.023**	**-**
medium	**-**	**-**	**327.035***	**327.036**

* inlet and outlet reduced (reductions added loosely, see page 32)

Order key for additional options:

327.0xx**x**

M – metal bowl
S – bowl protection

for example:
327.023** with **bowl protection** = 327.023**S

330-92 327-67

Spare parts and accessories

	Order No.	
	small	medium
Bracket mounting for mounting on top of the housing	**322-24**	**322-25**
Bowl protection for plastic bowl, with bowl ring	**322-130**	**322-131**
Metal bowl with seal	**327-92**	**327-96**
Plastic bowl with seal	**327-106**	**327-108**
Bowl ring for plastic bowl and metal bowl	**287-25**	**297-2**
Sealing ring for all bowls	**287-6**	**297-10**
Oil regulating valve plastic, kit	**330-92**	**330-92**
Oil regulating valve metall, kit	**327-67**	**327-67**

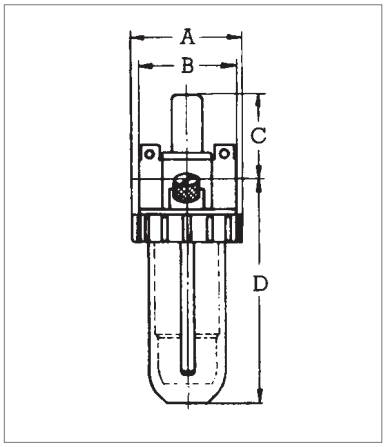

Technical data

		Size small	Size medium
Nominal rates of flow**		1160 Nl/min	4330 Nl/min
Min. flow rate***		47 Nl/min	117 Nl/min
Max. operating pressure (p_1)	- plastic bowl	16 bar	
	- metal bowl	25 bar	
Operating temperature	- plastic bowl	0 °C up to +50 °C	
	- metal bowl	0 °C up to +90 °C	
Effective bowl volume		40 cm³	135 cm³
Mounting position		vertical	
Direction of flow		arrow	
Nominal width		DN 6	DN 15
Nominal pressure (housing)		PN 25	
Weight		400 g	890 g
Material	- seals	NBR	
	- housing	zinc alloy	
	- plastic bowl	polycarbonate	

** measured at p_1 = 6 bar and Δp = 1 bar *** oil delivery 10 droplets/min at 6 bar

Dimensions [mm]

Size	small			medium	
	G 1/8*	G 1/4*	G 3/8	G 3/8*	G 1/2
A	56	56	56	87	87
B	57	57	50	88	80
C	51	51	51	55	55
D	119	119	119	156	156

*inlet and outled reduced (reductions added loosely)

Rates of flow

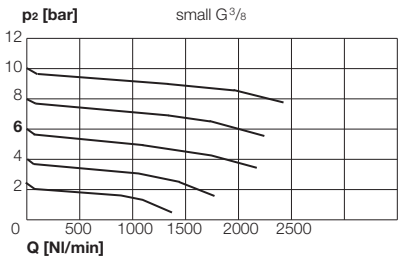

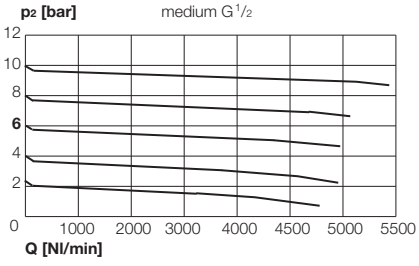

Recommended oil: Oil containers made of plastic (polycarbonate) are attacked by oil additives, anti-frost or synthetic oils. We therefore recommend regular lubricating oils of approx. **22 bis 32 cSt** at 40 °C (in the case of striking tools up to 68 cSt). Metal containers should be used for other oils, especially for low-temperature oils. Also recommended is a metal lubricator adjusting cap.

ewo Compressed air special oil

Oils see chapter 10

Container	Order No.
Volume 1 litre	**583**
Volume 5 litre	**583.1**

Fasteners and connecting elements see page 31

ООО "ПРОВЕРТ" www.prowert.ru info@prowert.ru +7 (495) 103-0638

Lubricators - G 3/4 – G 1 1/2

Air lubricators are used for metered enrichment of compressed air with finely atomized oil mist. A control valve causes the proportional flow rate of added oil.
Air lubricator straight through. More area oiler with proportional characteristic. Refilling oil while under pressure is possible. Needle valve for oil adjustment with high drop constancy for long periods of time. Plastic bowl (polycarbonate). Available as an option with bowl protection or metal bowl. Metal Oil regulating valve available on request. Port sizes G 3/4 to G 1 1/2.

300.090

With plastic bowl	Order No.			
	connection threads			
Size	G 3/4*	G 1	G 1/4*	G 1 1/2
compact	**407.038***	**407.039**	**-**	**-**
large	**300.080***	**300.090**	**-**	**-**
max	**-**	**-**	**327.410***	**327.411**

* inlet and outlet reduced (reductions added loosely, see page 32)

Order key for additional options:

407.0xx**x**

M – metal bowl
S – bowl protection

for example:
407.038** with **bowl protection** = 327.038**S

330-92 327-67

Spare parts and accessories

	Order No.		
	compact	large	max
Bracket mounting for mounting on top of the housing	**405-4**	**281-26**	**281-26**
Bowl protection for plastic bowl	**322-131**	**281-24**	**281-24**
Bowl ring for bowl protection	**297-13**	**300-31**	**300-31**
Metal bowl with seal	**327-96**	**327-112**	**327-112**
Plastic bowl with sea	**327-108**	**327-111**	**327-111**
Bowl ring for plastic bowl and metal bowl	**297-2**	**279-2**	**279-2**
Sealing ring for all bowls	**297-10**	**279-9**	**279-9**
Oil regulating valve plastic, kit	**-**	**330-92**	**330-92**
Oil regulating valve metall, kit	**327-67******	**327-67**	**327-67**

**** mounted

Technical data

		Size compact	Size large	Size max
Nominal rates of flow**		6330 Nl/min	7330 Nl/min	7830 Nl/min
Min. flow rate***		117 Nl/min	167 Nl/min	167 Nl/min
Max. operating pressure (p_1)	- plastic bowl		16 bar	
	- metal bowl		25 bar	
Operating temperature	- plastic bowl		0 °C up to +50 °C	
	- metal bowl		0 °C up to +90 °C	
Effective bowl volume		135 cm³	360 cm³	360 cm³
Mounting position			vertical	
Direction of flow			arrow	
Nominal width		DN 20	DN 20	DN 25
Nominal pressure (housing)			PN 25	
Weight		1270 g	1700 g	1970 g
Material	- seals		NBR	
	- housing	zinc alloy	aluminum	aluminum
	- plastic bowl		polycarbonate	

** measured at p_1 = 6 bar and Δp = 1 bar *** oil delivery 10 droplets/min at 6 bar

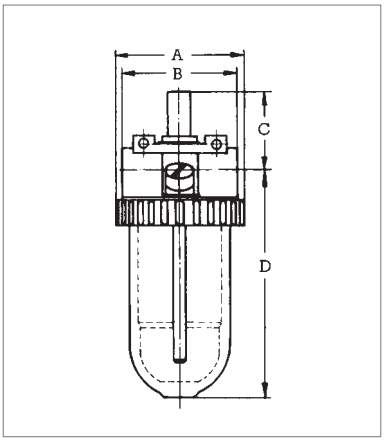

Rates of flow

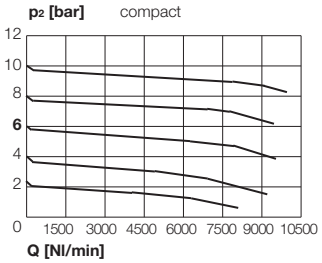

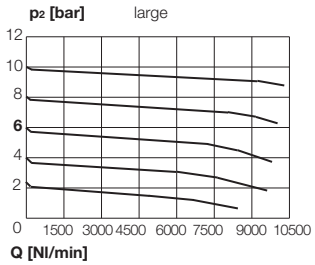

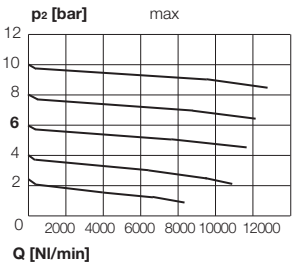

Dimensions [mm]

Size	compact		large		max	
	G 3/4*	G 1	G 3/4*	G 1	G 1 1/4*	G 1 1/2
A	102	90	133	133	133	133
B	-	-	134	120	134	120
C	69	69	58	58	65	65
D**	166	166	190	190	200	200

*inlet and outled reduced (reductions added loosely)

Recommended oil: Oil containers made of plastic (polycarbonate) are attacked by oil additives, anti-frost or synthetic oils. We therefore recommend regular lubricating oils of approx. **22 bis 32 cSt** at 40 °C (in the case of striking tools up to 68 cSt). Metal containers should be used for other oils, especially for low-temperature oils. Also recommended is a metal lubricator adjusting cap.

ewo Compressed air special oil

Oils see chapter 10

Container	Order No.
Volume 1 litre	**583**
Volume 5 litre	**583.1**

Fasteners and connecting elements see page 31

OOO "IPDEFT" www.prowett.ru info@prowett.ru +7 (495) 108-05-88

Lubricators - G1 1/2 – G2

Air lubricators are used for metered enrichment of compressed air with finely atomized oil mist. A control valve causes the proportional flow rate of added oil.
Air lubricator straight through. More area oiler with proportional characteristic. Refilling oil while under pressure is possible. Needle valve for oil adjustment with high drop constancy for long periods of time. Plastic bowl (polycarbonate). Available as an option with bowl protection or metal bowl. Metal Oil regulating valve available on request. Port sizes G1 1/2 to G2.

With plastic bowl	Order No. connection thread	
Size	G1 1/2*	G2
super	**457.011***	**457.012**

* inlet and outlet reduced (reductions added loosely, see page 32)

Order key for additional options:

457.0xx**x**

M – metal bowl
S – bowl protection

for example:
457.012** with **bowl protection** = 457.012**S

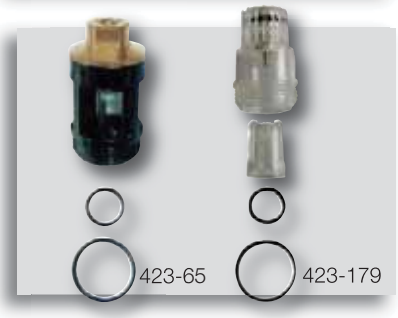

Spare parts and accessories

	Order No.
	super
Bracket mounting for mounting on top of the housing	**457-12**
Bowl protection for plastic bowl	**281-24**
Bowl ring for bowl protection	**300-31**
Metal bowl with seal	**327-112**
Plastic bowl with seal	**327-111**
Bowl ring for plastic bowl and metal bowl	**279-2**
Sealing ring for all bowls	**279-9**
Oil regulating valve plastic, kit	**423-65**
Oil regulating valve metall, kit	**423-179**

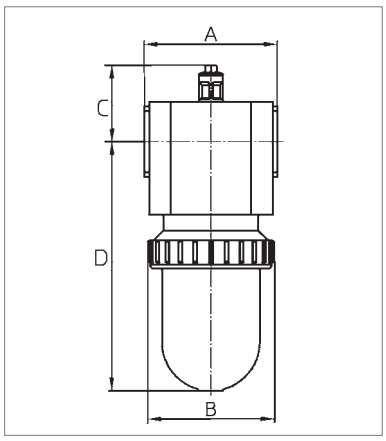

Technical data

		Size super
Nominal rates of flow**		14000 Nl/min
Min. flow rate***		170 Nl/min
Max. operating pressure (p_1)	- plastic bowl	16 bar
	- metal bowl	25 bar
Operating temperature	- plastic bowl	0 °C up to +50 °C
	- metal bowl	0 °C up to +90 °C
Effective bowl volume		600 cm³
Mounting position		vertical
Direction of flow		arrow
Nominal width		DN 50
Nominal pressure (housing)		PN 25
Weight		5290 g
Material	- seals	NBR
	- housing	aluminum
	- plastic bowl	polycarbonate

** measured at p_1 = 6 bar and Δp = 1 bar *** oil delivery 10 droplets/min at 6 bar

Dimensions [mm]

Connection threads	G1 1/2*	G2
A	140	140
B	140	140
C	80	80
D	350	350

*Ein- und Ausgang reduziert
(Reduktionen lose beigelegt)

Rates of flow

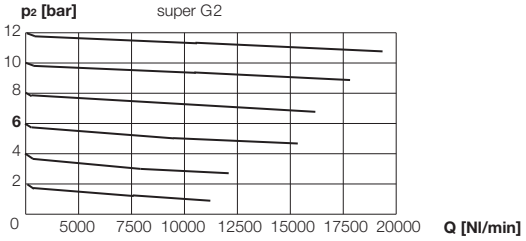

Recommended oil: Oil containers made of plastic (polycarbonate) are attacked by oil additives, anti-frost or synthetic oils. We therefore recommend regular lubricating oils of approx. **22 bis 32 cSt** at 40 °C (in the case of striking tools up to 68 cSt). Metal containers should be used for other oils, especially for low-temperature oils. Also recommended is a metal lubricator adjusting cap.

ewo Compressed air special oil

Oils see chapter 10

Container	Order No.
Volume 1 litre	**583**
Volume 5 litre	**583.1**

Fasteners and connecting elements see page 31

ООО "ПРОВЕРТ" www.prowert.ru info@prowert.ru +7 (495) 103-05-33

Small lubricators - G 1/4 – G 3/8

Oil mist by cyclical air stream

Air lubricator for mounting on impact air tools with fitful working rhythm such as impact wrenches, etc. The oil mist is created during cyclically airflow. Connection thread G 3/8 and G 1/4 (G 1/4 with inner reduction). Dosable Oil flow. Oil aspiration opposite the inlet screw. With plastic bowl.

Oil dosage: The permanently set dosage is about 0,4 cm³ per 100 working strokes. One filling lasts for about 3000 cycles. The adjustment screw on the filler, seals with an O-ring and can be adjusted.

Connection thread	Order No.
G 1/4*	317.12*
G 3/8	317.14

* inlet and outlet reduced (reductions added loosely, see page 32)

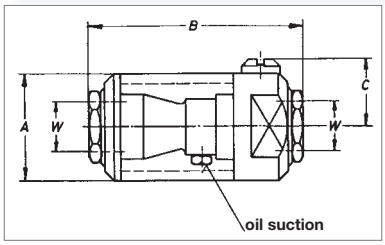

Spare parts

	Order No.
Screw with seal	317-56

Technical data

Max. operating pressure (p_1)	10 bar (PN 10)
Operating temperature	0 °C up to +50 °C
Mounting position	oil suction at lowest point!
Flow rate	ca. 750 l/min at Δp=1 bar
Direction of flow	any
Effective bowl volume	12 cm³
Nominal width	DN 8
Mass	33 x 67 mm
Weight	87 g
Material - seals	NBR
- housing	aluminum alloy
- oil sight glass	polycarbonate

Dimension [mm]

Connection thread	G 1/4*	G 3/8
A	33	33
B	67	60
C	22	22

* inlet and outled reduced

Small lubricators

Oil mist by flowing air stream

Compressed air lubricator for direct connection to compressed air tools like impact wrenches, grinder and so on. The oil fog is created by the flowing air. Connection thread G 1/4 inside and outside. Oil dosage is preset and fixed. Easy refill with external screw. Oil aspiration: Intake has to be at lowest position.

Oil dosage: The permanently set dosage is about 50 mm³ per 1 m³ flow rate. One filling lasts about 10 h at 100 Nl/min operating. The adjustment screw on the filler, seals with an o-ring and can be adjusted.

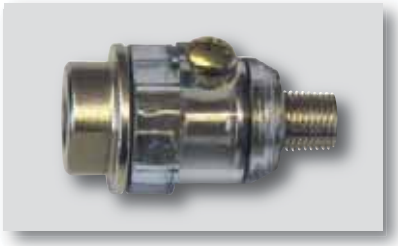

Connection thread	Order No.
G 1/4	317.10

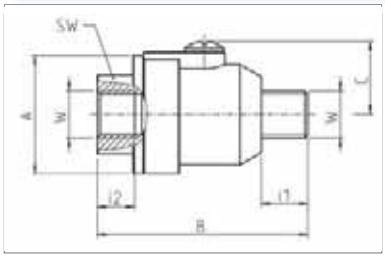

Technical data

Max. operating pressure (p_1)	0,5 - 10 bar (PN 10)
Flow rate	ca. 2.000 l/min to 6 bar
Operating temperature	0 °C up to +50 °C
Mounting position	oil suction at lowest point!
Direction of flow	any
Effective bowl volume	5,5 cm³
Mass	35 x 60 mm
Weight	120 g
Material - seals	NBR
- housing	cast aluminum
- oil sight glass	polycarbonate

Dimensions [mm]

Connection thread	G 1/4
A	33
B	59
C	20,5
W	G 1/4
i1	13
i2	10,5
SW	22

Recommended oil: Oil containers made of plastic (polycarbonate) are attacked by oil additives, anti-frost or synthetic oils. We therefore recommend regular lubricating oils of approx. **22 bis 32 cSt** at 40 °C (in the case of striking tools up to 68 cSt). Metal containers should be used for other oils, especially for low-temperature oils. Also recommended is a metal lubricator adjusting cap.

ewo Compressed air special oil

Oils see chapter 10.

Container	Order No.
Volume 1 litre	583
Volume 5 litre	583.1

Fasteners and connecting elements see page 31

OOO ПРОВЕРТ www.prowert.ru info@prowert.ru +7 (495) 108-05-88

Filter pressure regulator

Filter pressure regulators - G 1/8 – G 1/2

Compressed air filter and pressure regulator combined in one piece of equipment. Detailled description see at seperate components. With manually drain valve. Pressure regulator diaphragm type with secondary vent (exhaust) and extensive form of independence. Control range for p_2 at 0,5 to 3/6/10/16 bar. Gauge can be mounted on either side. Bracket mounting if desired. Operation by toggle or handwheel. Special models (for example, without secondary air exhaust) upon request. Port sizes G 1/8 to G 1/2.

Standard versions:

Control range 0,5-10 bar, with plastic bowl, with toggle, with gauge, filter porosity 40 µm	Order No.			
	connection threads			
Size	G 1/8*	G 1/4*	G 3/8	G 1/2
small	**324.313***	**324.323***	**324.333**	**-**
medium	**-**	**-**	**324.353***	**324.363**

* inlet and outlet reduced (reductions added loosely, see page 32)

Order key for all variants:

324.xxxx

- plastic bowl (without addition)
- **M** – metal bowl
- **S** – bowl protection

additional options

- **1** – 0,5 - 3 bar
- **2** – 0,5 - 6 bar
- **3** – 0,5 - 10 bar
- **4** – 0,5 - 16 bar

control range (p_2)

- **1** – G 1/8*
- **2** – G 1/4*
- **3** – G 3/8 *small*
- **5** – G 3/8* *medium*
- **6** – G 1/2

connection threads

- **2** – handwheel with gauge with manual drain valve
- **3** – toggle with gauge with manual drain valve
- **4** – handwheel without gauge with manual drain valve
- **5** – toggle without gauge with manual drain valve

for example
324.333 *- but* ***without gauge****, 0,5 - 10 bar and* ***with metal bowl*** *= 324.**5**33**M***

Spare parts and accessories

		Order No. small	Order No. medium
Bracket mounting for mounting on top of the cover		**286-88**	**274-48**
Bowl protection for plastic bowl, with bowl ring		**322-130**	**322-131**
Metal bowl with seal and manually operated drain valve		**324-101**	**324-109**
Gauge horizontal, ø50 (size small) ø63 (size medium)	display range: 0 - 6 bar *(for p_2 to 3 bar)*	**42**	**213**
	0 - 10 bar *(for p_2 to 6 bar)*	**55**	**214**
	0 - 16 bar *(for p_2 to 10 bar)*	**85**	**215**
	0 - 25 bar *(for p_2 to 16 bar)*	**96**	**216**
Plastic bowl with seal and manually operated drain valve		**322-112**	**322-118**
Bowl ring for plastic bowl and metal bowl		**287-25**	**297-2**
Sealing ring for all bowls		**287-6**	**297-10**
Seal cone complete		**323-119**	**280-220**
Diaphragm complete		**323-152**	**280-221**
Filter element	filter porosity 40 µm (mounted)	**287-10**	**267-37**
	filter porosity 5 µm	**287-13**	**298-9**

Gauges see chapter 10, page 53 seq.

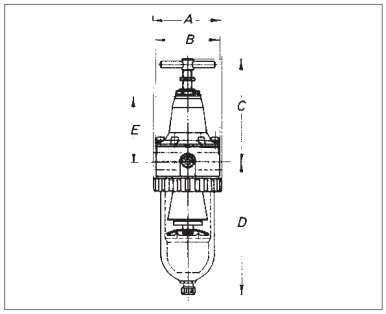

Dimensions [mm]

Size	small			medium	
Connection threads	G 1/8*	G 1/4*	G 3/8	G 3/8*	G 1/2
A	56	56	56	87	87
B	61	61	54	90	82
C	99	99	99	134	134
D	131	131	131	172	172
E	67	67	67	87	87

* inlet and outled reduced (reductions added loosely)

Condensate drain valves see chapter 8
Fasteners and connecting elements see page 31

Technical data

		Size small	Size medium
Nominal rates of flow**		910 Nl/min	2660 Nl/min
Max. operating pressure (p_1)	- plastic bowl	16 bar	
	- metal bowl	25 bar	
Operating temperature	- plastic bowl	0 °C up to +50 °C	
	- metal bowl	0 °C up to +90 °C	
Effective bowl volume		25 cm³	80 cm³
Mounting position		vertical, filter down	
Direction of flow		arrow	
Nominal width		DN 6	DN 15
Nominal pressure (housing)		PN 25	
Dependence upon supply pressure		< 3 %	< 2 %
Reversing control hysteresis		~ 1 bar	
Weight		840 g	2290 g
Material	- seals	NBR	
	- housing/spring cover	zinc die-cast	
	- plastic bowl	polycarbonate	
	- filter element	sintered bronze	

**measured at p_1 = 8 bar, p_2 = 6 bar and Δp = 1 bar

Rates of flow $p_1 = p_2 + 2$ bar

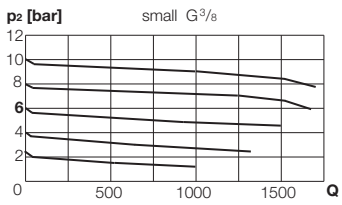

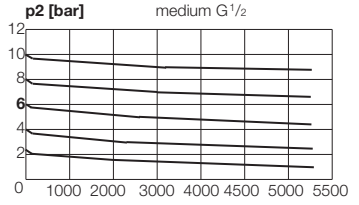

ООО "ПКФ ЕВРО" www.pkfevro.ru info@pkfevro.ru +7 (495) 780-0628

Two-piece maintenance units - G 1/8 – G 1/2

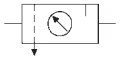

A maintenance unit consisting of a filter pressure regulator and lubricator with a double nipple. Can be combined with additional equipment to make other variations.
Port sizes G 1/8 to G 1/2.

331.23

Control range 0,5-10 bar, with plastic bowl and manually operated drain valve	Order No. connection thread			
Size	G 1/8*	G 1/4*	G 3/8	G 1/2
small	**331.21***	**331.22***	**331.23**	**-**
medium	**-**	**-**	**331.35***	**331.36**

* inlet and outlet reduced (reductions added loosely, see page 32)

Order key for additional options:

331.xx**x**

M – metal bowl
S – bowl protection

for example:
331.21** with **bowl protection
*= 331.21**S***

Spare parts and accessories

		Order No. small	Order No. medium
Bracket mounting for mounting on top of the cover		**323-68**	**280-132**
Connecting parts (double nipple) **of the basic units** (without reduction) for	G 3/8	**185.55**	**185.55**
	G 1/2	**-**	**185.77**

Technical data

		Size small	Size medium
Nominal rates of flow**		580 Nl/min	1830 Nl/min
Min. flow rate***		50 Nl/min	117 Nl/min
Max. operating pressure (p_1)	- plastic bowl	16 bar	
	- metal bowl	25 bar	
Operating temperature	- plastic bowl	0 °C up to +50 °C	
	- metal bowl	0 °C up to +90 °C	
Effective bowl volume	- filter bowl	25 cm³	80 cm³
	- oil bowl	40 cm³	135 cm³
Mounting position		vertical	
Direction of flow		arrow	
Nominal width		DN 6	DN 15
Nominal pressure (housing)		PN 25	
Dependence upon supply pressure		< 3 %	< 2 %
Reversing control hysteresis		~ 1 bar	
Weight		1400 g	3670 g
Material	- diaphragm/seals	NBR	
	- housing	zinc alloy	
	- plastic bowl	polycarbonate	
	- filter element	sintered bronze	

** measured at p_1 = 8 bar, p_2 = 6 bar and Δp = 1 bar
*** oil delivery 10 droplets/min at 6 bar

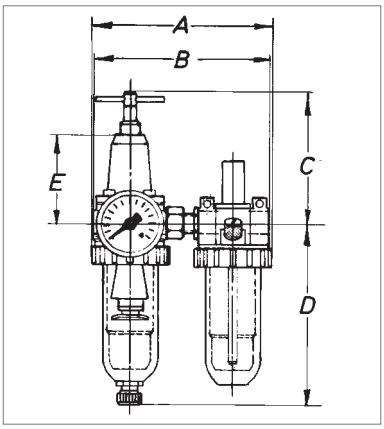

Dimensions [mm]

Size	small			medium	
connection threads	G 1/8*	G 1/4*	G 3/8	G 3/8*	G 1/2
A	124	124	124	182	182
B	130	130	122	184	176
C	99	99	99	134	134
D	131	131	131	172	172
E	67	67	67	87	87

* inlet and outled reduced (reductions added loosely)

Rates of flow $p_1 = p_2 + 2$ bar

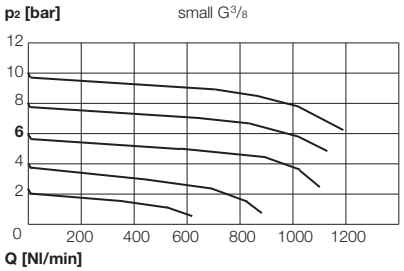

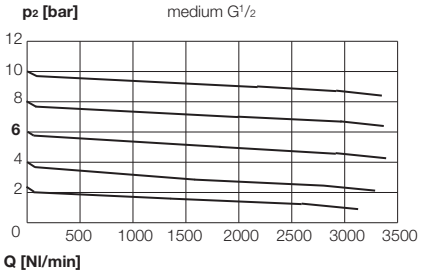

Recommended oil: Oil containers made of plastic (polycarbonate) are attacked by oil additives, anti-frost or synthetic oils. We therefore recommend regular lubricating oils of approx. **22 bis 32 cSt** at 40 °C (in the case of striking tools up to 68 cSt). Metal containers should be used for other oils, especially for low-temperature oils. Also recommended is a metal lubricator adjusting cap.

ewo Compressed air special oil

Oils see chapter 10

Container	Order No.
Volume 1 litre	**583**
Volume 5 litre	**583.1**

Filter pressure regulators see page 26
Lubricators see page 22
Condensate drain valves see chapter 8
Fasteners and connecting elements see page 31

ООО "ПРОВЕРТ" www.prowert.ru info@prowert.ru +7 (495) 108-05-88

Three-piece maintenance units - G 1/8 – G 1/2

333.23

A maintenance unit consisting of a filter pressure regulator and lubricator with a double nipple. Can be combined with additional equipment to make other variations.
Port sizes G 1/8 to G 1/2.

Control range 0,5-10 bar, with plastic bowl and manually operated drain valve	Order No. connection threads			
Size	G 1/8*	G 1/4*	G 3/8	G 1/2
small	**333.21***	**333.22***	**333.23**	**-**
medium	**-**	**-**	**334.35***	**334.36**

* inlet and outlet reduced (reductions added loosely, see page 32)

Order key for additional options:

333/334.xx**x**

M – metal bowl
S – bowl protection

for example:
333.21** with **bowl protection** = 333.21**S

Spare parts and accessories

		Order No. small	Order No. medium
Bracket mounting for mounting on top of the cover		**323-68**	**280-132**
Connecting parts (double nipple) **of the basic units** (without reduction) for	G 3/8	**185.55**	**185.55**
	G 1/2	**-**	**185.77**

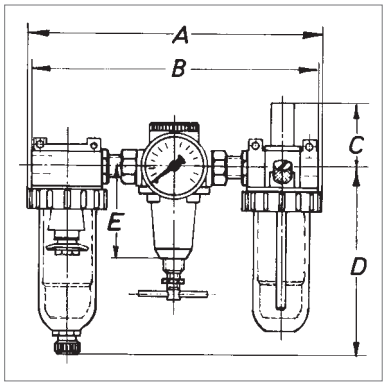

Dimensions [mm]

Size	small			medium	
connection threads	G 1/8*	G 1/4*	G 3/8	G 3/8*	G 1/2
A	196	196	196	281	281
B	197	197	197	282	274
C	51	51	51	55	55
D	135	135	135	172	172
E	67	67	67	85	85

* inlet and outled reduced (reductions added loosely)

Technical data

		Size small	Size medium
Nominal rates of flow**		500 Nl/min	1830 Nl/min
Min. flow rate***		50 Nl/min	117 Nl/min
Max. operating pressure (p_1)	- plastic bowl	16 bar	
	- metal bowl	25 bar	
Operating temperature	- plastic bowl	0 °C up to +50 °C	
	- metal bowl	0 °C up to +90 °C	
Effective bowl volume	- filter bowl	25 cm³	80 cm³
	- oil bowl	40 cm³	135 cm³
Mounting position		vertical	
Direction of flow		arrow	
Nominal width		DN 6	DN 15
Nominal pressure (housing)		PN 25	
Dependence upon supply pressure		< 3 %	< 2 %
Reversing control hysteresis			~ 1 bar
Weight		1780 g	3220 g
Material	- diaphragm / seals	NBR	
	- housing	zinc alloy	
	- plastic bowl	polycarbonate	
	- filter element	sintered bronze	

** measured at p_1 = 8 bar, p_2 = 6 bar and Δp = 1 bar
*** oil delivery 10 droplets/min at 6 bar

Rates of flow

$p_1 = p_2 + 2$ bar

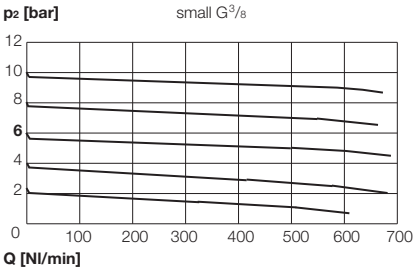

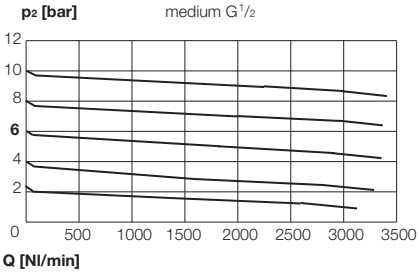

Recommended oil: Oil containers made of plastic (polycarbonate) are attacked by oil additives, anti-frost or synthetic oils. We therefore recommend regular lubricating oils of approx. **22 bis 32 cSt** at 40 °C (in the case of striking tools up to 68 cSt). Metal containers should be used for other oils, especially for low-temperature oils. Also recommended is a metal lubricator adjusting cap.

ewo Compressed air special oil

Oils see chapter 10

Container	Order No.
Volume 1 litre	**583**
Volume 5 litre	**583.1**

Filters see page 2
Pressure regulators see page 13
Lubricators see page 22

Condensate drain valves see chapter 8
Fasteners and connecting elements see page 31

ООО "ПКФ ЕВРО" www.pnevmo.ru info@pnevmo.ru +7 (495) 788-0268

Three-piece maintenance units - G 3/4 – G 1 1/2

A maintenance unit consisting of a filter pressure regulator and lubricator with a double nipple. Can be combined with additional equipment to make other variations.
Port sizes G 3/4 to G 1 1/2.

334.49

Control range 0,5-10 bar, with plastic bowl and manually operated drain valve

Size	Order No. connection threads G 3/4*	G 1	G 1 1/4*	G 1 1/2
compact	**415.38***	**415.39**	-	-
large	**334.48***	**334.49**	-	-
max	-	-	**334.410***	**334.411**

* inlet and outlet reduced (reductions added loosely, see page 32)

Order key for additional options:

415/334.xxx
- **M** – metal bowl
- **S** – bowl protection

for example:
415.38** with **bowl protection** = 415.38**S

Spare parts and accessories

		Order No. compact	large	max
Bracket mounting for mounting on top of the cover (required **2x**)		**406-17**	**281-26**	**281-26**
Connecting parts (double nipple) **of the basic units** for	G 1	**415-12**	**415-14**	-
(without reduction)	G 1 1/2	-	-	**280-228**

Technical data

		Size compact	Size large	Size max
Nominal rates of flow**		5330 Nl/min	6000 Nl/min	6670 Nl/min
Min. flow rate***		117 Nl/min	167 Nl/min	167 Nl/min
Max. operating pressure (p_1)	- plastic bowl		16 bar	
	- metal bowl		25 bar	
Operating temperature	- plastic bowl		0 °C up to +50 °C	
	- metal bowl		0 °C up to +90 °C	
Effective bowl volume	- filter bowl	80 cm³	260 cm³	260 cm³
	- oil bowl	135 cm³	360 cm³	360 cm³
Mounting position			vertical	
Direction of flow			arrow	
Nominal width		DN 20	DN 20	DN 25
Nominal pressure (housing)			PN 25	
Dependence upon supply pressure			< 2 %	
Reversing control hysteresis			~ 1 bar	
Weight		5250 g	7270 g	9950 g
Material	- diaphragm/seals	NBR	NBR	NBR
	- housing: - filters/lubricators	zinc alloy	aluminum	aluminum
	- pressure regulator	zinc alloy	brass	brass
	- filter element	sintered bronze	sintered bronze	sintered bronze
	- plastic bowl	polycarbonate	polycarbonate	polycarbonate

** measured at p_1 = 8 bar, p_2 = 6 bar and Δp = 1 bar *** oil delivery 10 droplets/min at 6 bar

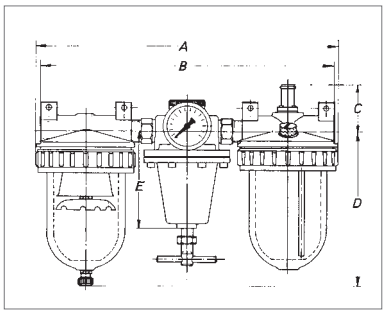

Dimensions [mm]

Size	compact		large		max	
Connection threads	G 3/4*	G 1	G 3/4*	G 1	G 1 1/4*	G 1 1/2
A	290	290	426	426	426	426
B	315	290	382	370	382	370
C	69	69	58	58	58	58
D	176	176	206	206	206	206
E	90	90	130	130	130	130

* inlet and outled reduced (reductions added loosely)

Rates of flow $p_1 = p_2 + 2$ bar

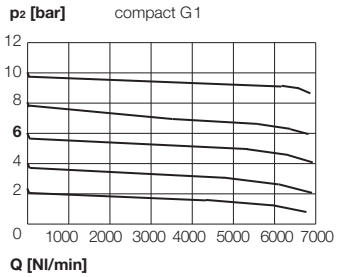

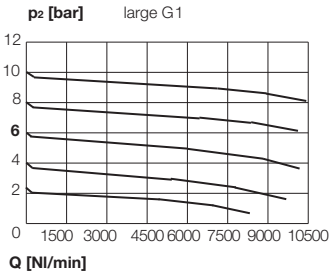

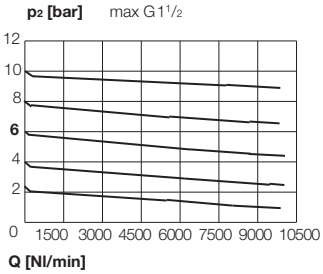

Recommended oil: Oil containers made of plastic (polycarbonate) are attacked by oil additives, anti-frost or synthetic oils. We therefore recommend regular lubricating oils of approx. **22 bis 32 cSt** at 40 °C (in the case of striking tools up to 68 cSt). Metal containers should be used for other oils, especially for low-temperature oils. Also recommended is a metal lubricator adjusting cap.

ewo Compressed air special oil

Oils see chapter 10

Container	Order No.
Volume 1 litre	**583**
Volume 5 litre	**583.1**

Condensate drain valves see chapter 8
Fasteners and connecting elements see page 31
Filters see page 2
Pressure regulators see page 13
Lubricators see page 22

OOO "IPCHEP" www.prowett.ru info@prowett.ru +7 (495) 108-05-88

Three-piece maintenance units - G1 1/2 – G2

458.212

A maintenance unit consisting of a filter pressure regulator and lubricator with a double nipple. Can be combined with additional equipment to make other variations.
Port sizes G1 1/2 to G2.

Control range 0,5-10 bar, with plastic bowl and manually operated drain valve	Order No. connection threads	
Size	G1 1/2*	G2
super	**458.211***	**458.212**

* inlet and outlet reduced (reductions added loosely, see page 32)

Order key for additional options:

458.21xx

M – metal bowl
S – bowl protection

for example:
458.212** with **bowl protection** = 458.212**S

Spare parts and accessories

	Order No.
	super
Bracket kit for mounting on the housing (at filter + lubricator), complete with 2 brackets	**458-1**
Connecting parts (double nipple), connection thread G2	**454-9**

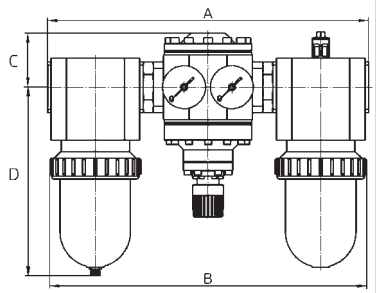

Technical data

		Size super
Nominal rates of flow**		11660 Nl/min
Min. flow rate***		167 Nl/min
Max. operating pressure (p_1)	- plastic bowl	16 bar
	- metal bowl	25 bar
Operating temperature	- plastic bowl	0 °C up to +50 °C
	- metal bowl	0 °C up to +90 °C
Effective bowl volume	- filter bowl	500 cm³
	- oil bowl	600 cm³
Mounting position		vertical
Direction of flow		arrow
Nominal width		DN 50
Nominal pressure (housing)		PN 25
Dependence upon supply pressure		< 2 %
Reversing control hysteresis		~ 1 bar
Weight		17530 g
Material - diaphragm/seals		NBR
- housing:	- filters/lubricators	aluminum
	- pressure regulator	alu alloy
- filter element		sintered bronze
- plastic bowö		polycarbonate

** measured at p_1 = 8 bar, p_2 = 6 bar and Δp = 1 bar
*** oil delivery 10 droplets/min at 6 bar

Dimensions [mm]

Size	super	
connection threads	**G1 1/2***	**G2**
A	332	332
B	332	320
C	69	69
D	176	176

** inlet and outled reduced (reductions added loosely)

Rates of flow $p_1 = p_2 + 2$ bar

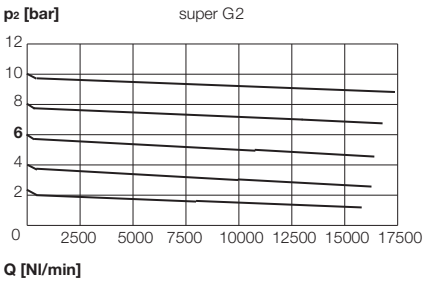

Recommended oil: Oil containers made of plastic (polycarbonate) are attacked by oil additives, anti-frost or synthetic oils. We therefore recommend regular lubricating oils of approx. **22 bis 32 cSt** at 40 °C (in the case of striking tools up to 68 cSt). Metal containers should be used for other oils, especially for low-temperature oils. Also recommended is a metal lubricator adjusting cap.

ewo Compressed air special oil

Oils see chapter 10

Container	Order No.
Volume 1 litre	**583**
Volume 5 litre	**583.1**

Filters see page 2
Pressure regulators see page 13
Lubricators see page 22
Condensate drain valves see chapter 8
Fasteners and connecting elements see page 31

ООО "ПРОВЕРТ" www.prowert.ru info@prowert.ru +7 (495) 103 0638

Fasteners and connectors

Bracket sets for mounting on top of the housing

Content: mounting set and 2 cap screws.

Suitable for	Size	Order No.
Filters, Microfilters, Lubricators	small	**322-24**
Filters, Microfilters, Lubricators	medium	**322-25**
Filters, Microfilters, Lubricators	compact	**405-4**
Filters, Microfilters, Lubricators, 3er Maintenance units*	large, max	**281-26**
Filters, Microfilters, Lubricators	super	**457-12**
Filters 40/60 bar, Microfilters 40/60 bar	I	**445-39**
Filters 40/60 bar, Microfilters 40/60 bar	II	**445-28**
Filters 40/60 bar	super	**429-27**
Maintenance units (3er) (Contents: 2 brackets and 4 screws)	super	**458-1**
Pressure regulator (secured with 4 screws)	super	**417-47**
High pressure regulators 60 bar (secured with 4 screws)	II	**302-19**

* 2 sets required!

322-24

Bracket mounting for fixing on lid

Content: Mounting brackets, nut and washer.

Suitable for	Size	Order No.
Small pressure regulator (content: Mounting brackets and nut without washer)	-	**443-36**
Pressure regulators, 2er/3er-Maintenance units, Filter pressure regulators	small	**323-68**
Pressure regulators	intermediate	**280-134**
Pressure regulators, Filter pressure regulators, 2er/3er*-Maintenance units, Precision pressure regulators	medium I	**280-132**
Pressure regulators 3er-Maintenance units*	compact	**406-17**
Pressure regulators 40 bar, Water pressure regulators (bracket, 2 screws, 2 nuts)	small	**286-88**
Pressure regulators 40 bar, Water pressure regulators (bracket, 2 screws, 2 nuts) High pressure regulators 60 bar	medium I	**274-48**

* 2 sets required!

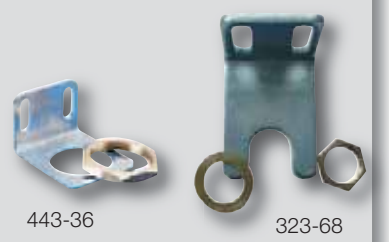

443-36 323-68

Bracket set for mounting on cap-screws

(2 screws to be released and to be mounted in between)
Content: mounting bracket and 2 cylindric screws.

Suitable for	Size	Order No.
Pressure regulators, Filter pressure regulators, Water pressure regulator	large, max	**280-239**

280-239

Connecting parts of the basic units (without reduction) for 2- and 3-piece maintenance units

Double nipple also see chapter 10, page 20.

Suitable for	Connection threads	Size	Order No.
2 piece maintenance units	G 3/8	small	**185.55**
	G 1/2	medium	**185.77**
3 piece maintenance units	G 3/8	small	**185.55**
	G 1/2	medium	**185.77**
	G 1	compact	**415-12**
	G 1	large	**415-14**
	G 1 1/2	max	**280-228**
	G 2	super	**454-9**

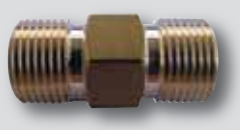

185.55

761.03.31.A.04/2015
3 Compressed Air Preparation - standard 31
ООО "ПРОВЕРТ" www.prowert.ru info@prowert.ru +7 (495) 108-05-88

Panel fasteners, Reductions

323-69

Panel fasteners

Contents: 1-2 nuts and washers.

Suitable for	Size	Thread (nut)	Order No.
Small pressure regulators	small	M30 x 1,5	**381-32**
Pressure regulators	small	M14 x 1	**323-69**
Pressure regulators	intermediate	M20 x 1,5	**323-66**
Pressure regulators	medium	M22 x 1	**280-133**
Pressure regulators	compact	M28 x 1,5	**406-18**
Pressure regulators 40 bar	small	M20 x 1,5	**286-89**
Pressure regulators 40 bar	medium	M28 x 1,5	**274-49**
Precision pressure regulators	I	M22 x 1	**280-133**
Pressure regulator with internal gauge	-	M48 x 1,5	**367-33**
Water pressure regulators	small	M20 x 1,5	**286-89**
Water pressure regulators	medium	M28 x 1,5	**274-49**

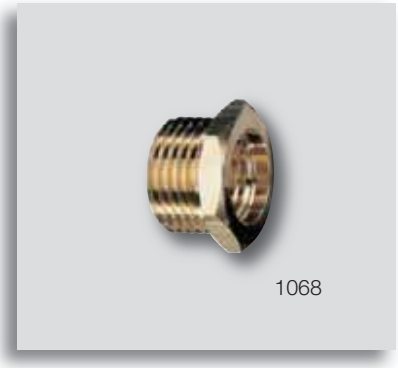
1068

Reductions

See chapter 10, page 20.

Size Male x female thread	Size	Suitable for	Order No.
G 3/8 x G 1/8	small	Filters, Microfilters, Lubricators Small lubricators, Filter pressure regulators 2 and 3 piece maintenance units	**322-18**
	small, intermediate	Pressure regulators	
G 3/8 x G 1/4	small	Filters, Microfilters, Lubricators Filter pressure regulators 2 and 3 piece maintenance units	**1068**
	small, intermediate	Pressure regulators	
G 1/2 x G 3/8	small	Filters, Microfilters, Lubricators Pressure regulators, Filter pressure regulators 2 and 3 piece maintenance units	**1018**
	I	Filters 40 bar / 60 bar Microfilters 40 bar / 60 bar	**443-87***
G 1 x G 3/4	compact, large	Filters, Microfilters, Lubricators 3 piece maintenance units	**1193**
	large	Microfilters	
	II	Filters 40 bar / 60 bar Microfilters 40 bar / 60 bar	**1327***
G 1 1/2 x G 1 1/4	max	Filters, Microfilters, Lubricators 3 piece maintenance units	**280-241**
G 2 x G 1 1/2	super	Filters, Microfilters, Lubricators Microfilters 40 bar, 3 piece mainten. units	**417-52**
	super	Lubricators, Filters 40 bar	**417-45***

*Reduction + seal ring

ООО "ПРОВЕРТ" www.prowert.ru info@prowert.ru +7 (495) 103 0e33

Compressed Air Preparation - variobloc

System description of variobloc		**2 – 3**
Filters	Type 482	**4**
Micro-filters	Type 491	**5**
Membrane air dryers	Type 494	**6**
Activated charcoal-filters	Type 493	**7**
Pressure regulators	Type 481	**8**
Precision pressure regulators	Type 495	**9**
Batterie regulators	Type 490	**10**
Lubricators	Type 483	**11**
Filter pressure regulators	Type 480	**12**
Two-piece maintenance units	Type 488	**13**
Three-piece maintenance units	Type 489	**14**
Portable three-piece maintenance units	Type 489	**15**
Ball valves	Type 487	**16**
3/2-way starting valves, electrical	Type 485	**17**
Distributors	Type 486	**18**
Pneumatic valves	Type 484	**19**
Fixing- and connection elements		**20**
Accessories		**21 – 22**

ООО "ПРОМЭЛ" www.promel.ru info@promel.ru +7 (495) 788-05-88

Facts – Data – Advantages

The modular system of variobloc series provides a variety of design options and makes it easy to quickly and individually adjust individual components to changed operating conditions.

The differences are in the details: Whether ease of handling, performance, or longevity - these ewo-qualities bring you benefits.

- ✓ **Safety acc. EN 983 (Machines, equipment and components)**
- ✓ **Modern industrial design**
- ✓ **Robust metal housing**
- ✓ **(Zinc die casting with 2-fold surface protection)**
- ✓ **Thread connection acc. DIN with sealing surface**
- ✓ **Bayonet fixing for the plastic and metal bowl**
- ✓ **Retrofit metal bowl protection for the plastic bowl**
- ✓ **Option semi and fully automatic drain valves**
- ✓ **Two combinable connection possibilities (comfort - compact)**
- ✓ **Comfort connection with adhesive o-rings**
- ✓ **Integrated T-Bracket as connection module**
- ✓ **Direct wall mounting**
- ✓ **High stiffness / stability of the connection**
- ✓ **Optimal regulation characteristics through roll diaphragms**
- ✓ **Lubricator with enhanced flow rate and nebulisation**

Materials used:

Housing, fastening elements	zinc diecasting (Z410)
Cap, head (regulator)	PA6-GF30
Handwheel	POM
Cover	ABS
Seals, diaphragm	NBR
Filter insert	PE sintered
Impact cartridge, cutting wheel	POM
Bowl	polycarbonate
Interlock	POM
Pressure spring	steel galvanized
Gegendruckfeder	stainless steel
Cone, diaphragm plate	brass
Oil regulating valve	spec. PA
Oil regulation	PU
Metal bowl, bezel	zinc diecasting (Z410)
Sighting tube (at metal bowl)	spec. PA
Bowl protection	aluminum

The parts have a material indicator of formal, so they should be disposed of easily and are well recyclable.

ООО "ПНЕВМОТЕХ" www.pnevmotex.ru info@pnevmotex.ru +7 (495) 726-47-42

Module fixation
with bracket angle (for regulator) or direct wall mounting (2 screws) for all devices.

Comfort blocking (only size I) **–**
faster change of components or complete sets with **Connection module** (sealing rings adhesive).
Result: A shorter assembling time.

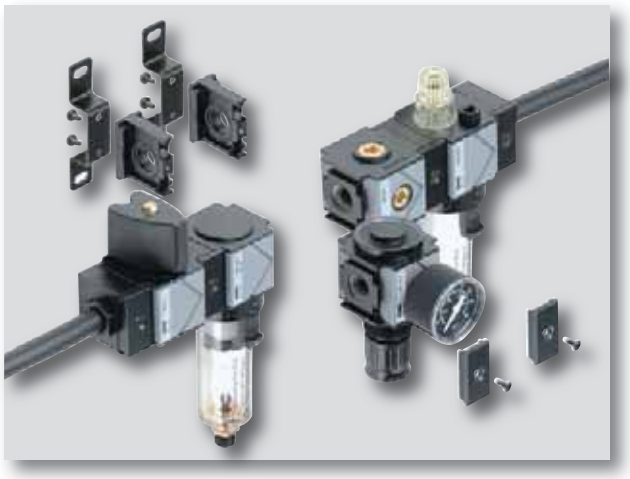

Lockable handwheel
for pressure regulator, battery pressure regulator, filter regulator and service units available.

Thread connecting plate
with adhesive sealing rings (also available with bracket) for assembly friendly installation in pipe -or hose systems.

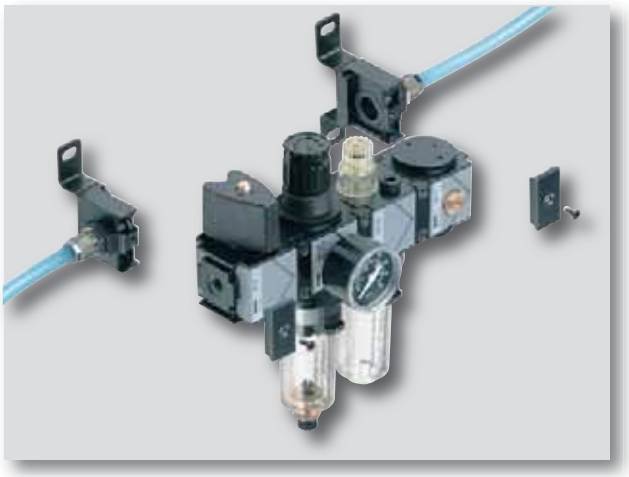

Compact connection
with optional integrated T-bracket.

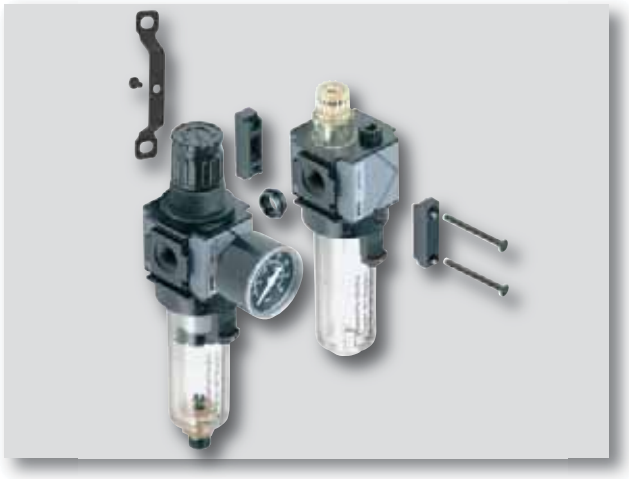

ООО "ПРОМЭЛ" www.promel.ru info@promel.ru +7 (495) 788-05-88

Filters type 482 - G 1/4 – G 1

Cover in individual color
available upon request (standard: grey)!

Compressed air filters serve to remove impurities (condensation water, pipe scaling, rust particles) from the air in the working place. The cleansing is done in two stages by means of cyclone (condensation) and PE-Filter-elements (solid contamination).
Size I with connection threads G 1/4 and G 3/8 and size II with connection threads G 1/2, G 3/4 and G 1 available. 3 different models of drain valves are possible: manually operated, semi-automatic or fully-automatic (internal or external) drain valves.

Standard version:

With plastic bowl and manually operated drain valve, filter porosity 40 µm

Size	Order No. Connection threads G 1/4	G 3/8	G 1/2	G 3/4	G 1**
I	**482.221**	**482.231**	-	-	-
II	-	-	**482.261**	**482.281**	**482.291**

Order key for all variants:

482.xxxx

- plastic bowl *(without addition)*
- **S** – metal bowl protection
- **M** – metal bowl
  → *bowl type (additional option)*
- **1** – 40 µm
- **2** – 5 µm
  → *filter porosity*
- **2** – G 1/4
- **3** – G 3/8
  → ***size I***
- **6** – G 1/2
- **8** – G 3/4
  → ***size II***
- **9** – G 1**
  → *connection threads*
- **2** – manually operated drain valve
- **3** – internal automatic drain valve
- **5** – semi-automatic drain valve
- **6** – external automatic drain valve A

for example:
482.221** – but **with internal automatic drain valve** and **metal bowl** = 482.**3**21**M

Spare parts and accessories

	Order No. size I	size II
Metal bowl with manually operated drain valve	**480-28**	**480-213**
Plastic bowl with metal bowl protection	**480-90**	**–**
Metal bowl protection	**480-25**	**–**
Plastic bowl with manually operated drain valve	**480-18**	**480-210**
Filter element filter porosity 40 µm (mounted)	**480-7**	**480-219**
5 µm	**480-45**	**480-220**

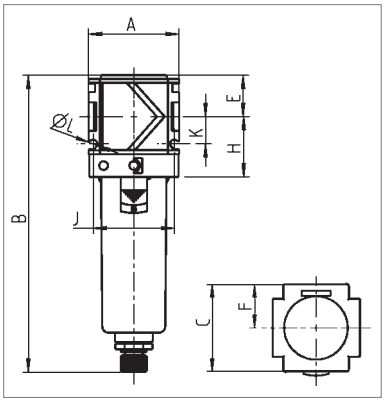

Technical data

	size I		size II		
Connection threads	**G 1/4**	**G 3/8**	**G 1/2**	**G 3/4**	**G 1****
Nominal rates of flow (Nl/min)*	1800	2000	3200	3500	3500
Filter porosity	40 µm (optional: 5 µm)				
Max. operating pressure (p1)	16 bar (20 bar with metal bowl / 12 bar with internal automatic drain valve)				
Max. operating temperature	50 °C / 80 °C with metal bowl				
Volume of condensate	25 cm³		85 cm³		
Drain valve	manually operated (optional: semi-automatic, automatic)				
Material - housing	zinc alloy				
- bowl	polycarbonate (optional: metal)				
Weight	310 g		840 g	840 g	1300 g

* Measured at 6 bar pre-pressure (p1) and Δp = 1 bar
** Inlet and outlet only with mounting plates set G 1 (included, see page 20)

Dimensions [mm]

Size	I		II	
Connection thread	G 1/4, G 3/8		G 1/2, G 3/4	G 1**
A	48		70	125
B	158		202	202
C	48		70	70
E	22		26	26
F	24		35	35
H	32		44	44
J	43		62	62
K	14,5		18	18
L (ø)	4,4		5,4	5,4

Rates of flow

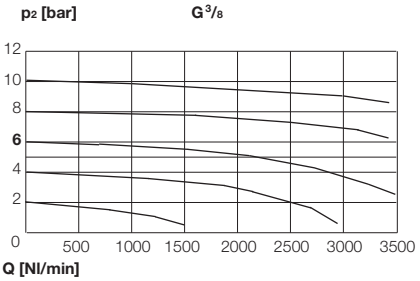

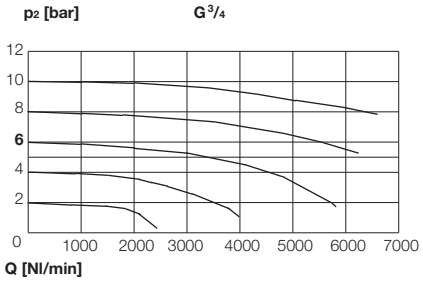

Drain valves see page 20 and chapter 8
Fixing- and assembly-possibilities see page 20

000 "ПРОМЭР" www.promvert.ru promp@promvert.ru +7 (495) 788-03-03

Micro-filters type 491 - G 1/4 – G 1

Microborosilicate air filters are suitable for use in all situations in which the required purity of the compressed air is especially high. As the second stage after the standard filter they remove almost without residue the smallest remaining particles of water, oil or dirt to 99,999 % (for 0,01 µm). Size I with connection threads G 1/4 and G 3/8 and size II available with connection threads G 1/2, G 3/4 and G 1.

Cover in individual color
available upon request (standard: grey)!

Standard version:

With plastic bowl and manually operated drain valve, without clogging indicator

Size	Order No. Connection threads G 1/4	G 3/8	G 1/2	G 3/4	G 1**
I	**491.220**	**491.230**	-	-	-
II	-	-	**491.260**	**491.280**	**491.290**

Order key for all variants:

491.xxxx

- plastic bowl *(without addition)*
- **S** – metal bowl protection
- **M** – metal bowl
  - *bowl type (additional option)*
- **0** – without
- **1** – mechanical
- **2** – electrical
  - *clogging indicator*
- **2** – G 1/4
- **3** – G 3/8
  - ***size I***
- **6** – G 1/2
- **8** – G 3/4
  - ***size II***
  - *connection threads*
- **2** – manually operated drain valve
- **5** – semi-automatic drain valve
- **6** – external automatic drain valve A

for example:
491.220 *– but* ***with external automatic drain valve*** *and* ***metal bowl*** *= 491.**6**20**M***

Spare parts and accessories

	Order No. size I	size II
Metal bowl with manually operated drain valve	**480-28**	**480-213**
Metal bowl protection	**480-25**	**480-216**
Pressure switch for electrical output, differential pressure 0,7 bar	**491-5**	**491-5**
Plastic bowl with manually operated drain valve	**491-13**	**491-108**
Mikro-filter element with seal	**491-4**	**491-103**

Technical data

	size I		size II		
Connection threads	**G 1/4**	**G 3/8**	**G 1/2**	**G 3/4**	**G 1****
Nominal rates of flow (Nl/min)*	370	420	1000	1100	1100
Particle separation	99,999 %, related to 0,01 µm (prefiltration necessary at 5 µm!)				
Residual oil content	0,01 mg/m³				
Air quality to ISO 8573.1	Class 1 dirt, Class 1 oil				
Max. operating pressure (p_1)	16 bar / 20 bar with metal bowl				
Max. operating temperature	50 °C / 80 °C with metal bowl				
Volume of condensate	10 cm³		30 cm³		
Drain valve	manually operated (opt.: semi-automatic, automatic)				
Material - housing	zinc alloy				
- bowl	polycarbonate (optional: metal)				
Weight	310 g		870 g	870 g	1330 g

* Measured at 7 bar pre-pressure (p_1) and Δp = 0,1 bar
** Inlet and outlet only with mounting plates set G1 (included, see page 20)

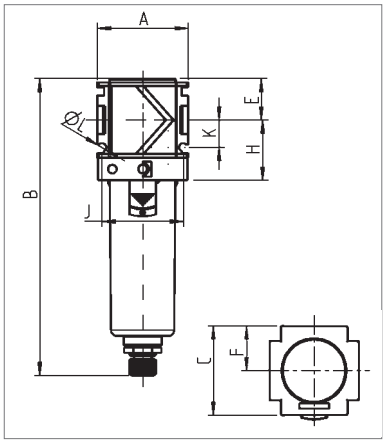

Rates of flow

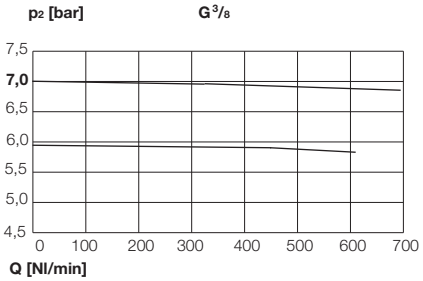

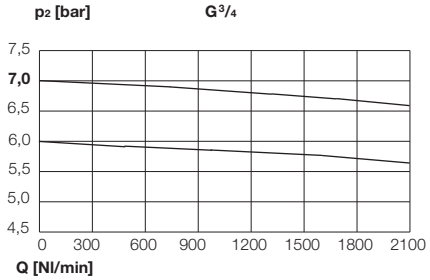

Dimensions [mm]

Size	I	II	
Connection thread	G 1/4, G 3/8	G 1/2, G 3/4	G 1**
A	48	70	125
B	158	202	202
C	48	70	70
E	22	26	26
F	24	35	35
H	32	44	44
J	43	62	62
K	14,5	18	18
L (ø)	4,4	5,4	5,4

Drain valves see page 20 and chapter 8
Fixing- and assembly-possibilities see page 20

ООО "ПРОМЭЛ" www.promel.ru info@promel.ru +7 (495) 788-05-88

Membrane air dryers type 494 - G 1/4 – G 1

Membrane dryer for efficient removal of water vapor from the air. It contributes significantly to process security. The high demands to the air quality are implemented into highest reliability by this membrane dryer of our variobloc series. Guaranteed drying, in any case reduced moisture. Low pressure loss. Maintenance-free, since there are no wearing parts in the dryer. No electrical energy required. No environment polliting desiccant necessary. No condensation, as this is blown into the atmosphere with the drying flow. Easy combination with all variobloc filters.
For proper function and a long lifetime, it is absolutely necessary to pre-filter the compressed air! We recommend our pre-filter model 482 and micro-filter model 491.
Available in several dimensions for different degrees of drying power, from 50 Nl/min up to 734 Nl/min.
Application range: Automotive, metal-processing, wood craft, body shops, all industrial usage-based drying, instrument air drying, pneumatic controls, medical air, analyzer, air control panels, etc.

Standard version:

Drying power: 200 Nl/min (size I) or 734 Nl/min (size II), with T-bracket

Size	Order No. Connection threads G 1/4	G 3/8	G 1/2	G 3/4	G 1*
I	**494.241**	**494.341**	**-**	**-**	**-**
II	**-**	**-**	**494.641**	**494.841**	**494.941**

Order key for all variants:

494.x x x

0 – without mounting bracket
1 – with T-bracket

	Dimension I	*Dimension II*
1 –	50	300
2 –	100	400
3 –	150	534
4 –	200	734

Dimension (=Nominal rates of flow* [Nl/min]**)
** at 7 bar, inlet dew point +35 °C, outlet dew point +15 °C

2 – G 1/4
3 – G 3/8 — ***size I***
6 – G 1/2
8 – G 3/4 — ***size II***
9 – G 1*

connection threads

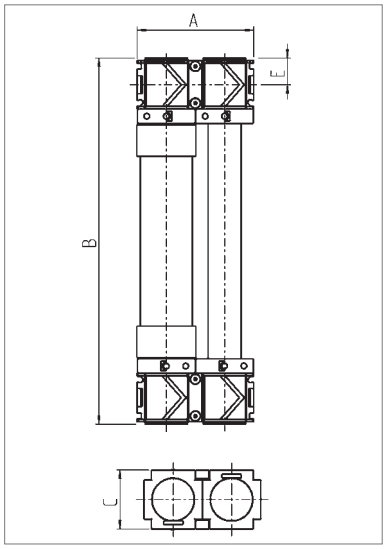

Technical data

	size I		size II		
Connection threads	G 1/4	G 3/8	G 1/2	G 3/4	G 1*
Operating pressure (p_1)	0 - 12 bar				
Operating temperature	1,5 - 60 °C				
Differential pressure	200 mbar				
Air quality to ISO 8573.1	Class 1 dirt, Class 1 oil				
Material - membrane fiber	PES				
- membrane shell	aluminium				
- housing	zinc alloy				
- seals	NBR				
Weight (kg)	**Dimensions 1-4:** 4,2 / 4,4 / 4,6 / 4,8		**Dimensions 1-4:** 5,2 / 5,4 / 5,6 / 5,8		

* Inlet and outlet only with mounting plates set G 1 (included, see page 20)

Performance

		Nominal rates of flow* [Nl/min]			
Dimension I	1	50	37	23	17
	2	100	72	47	33
	3	150	107	72	52
	4	200	142	95	68
Dimension II	1	300	213	142	103
	2	400	283	188	137
	3	534	427	283	207
	4	734	568	378	273
Inlet dew point (°C)		15	3	-20	-40
Purge air consumption (%)		10	14	21	29
Water removal (%)		69,70	86,53	98,20	99,77

At 7 bar and inlet dew point +35 °C.
Data refers to inlet flow capacity.

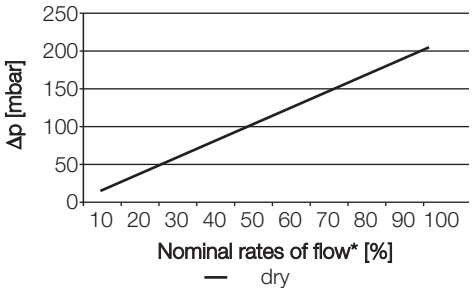

Correction factors:
To calculate the correct capacity of a given filter based on actual operating conditions, multiply the nominal flow capacity by the appropriate correction factor.

CORRECTED CAPACITY = NOMINAL FLOW CAPACITY* x C_{OP}

[bar]	4	5	6	7	8	9	10	11	12
C_{OP}	0,41	0,56	0,76	1	1,22	1,48	1,76	1,86	2,22

Dimensions [mm]

Size	I			
Dimension	**1**	**2**	**3**	**4**
A	96			
B	298	396	498	578
C	48			
E	22			
Size	**II**			
Dimension	**1**	**2**	**3**	**4**
A	140			
B	406	470	559	686
C	70			
E	26			

Fixing- and assembly-possibilities see page 20

ODO "PROBEST" www.prowert.ru info@prowert.ru +7 (495) 108-05-38

Activated charcoal-filters type 493 - G 1/4 – G 1

Activated charcoal-filters serve to remove oil vapours and other organic pollutants from pressurised air. The active charcoal fibre (the adsorption capacity of which is sufficient for approx. 1,000 hours of operation) is positioned between two stainless-steel nettings. The air at the inflow opening should be dry and free of particles; this is why the prior attachment of a micro-filter is categorically recommended. Caution! Some hazardous substances are either not at all or only slightly adsorbent, therefore non-removable with active charcoal! Such substances are i.e., carbon dioxide, carbon monoxide, ammonia.

Cover in individual color available upon request (standard: grey)!

With plastic bowl, without drain valve	Order No.				
	Connection threads				
Size	G 1/4	G 3/8	G 1/2	G 3/4	G 1**
I	**493.02**	**493.03**	**-**	**-**	**-**
II	**-**	**-**	**493.06**	**493.08**	**493.09**

Order key for additional options:

493.xx**x**

M – metal bowl
S – metal bowl protection

for example:
493.02** with **metal bowl protection** = 493.02**S

Spare parts and accessories

	Order No.	
	size I	size II
Metal bowl	**480-10**	**480-113**
Metal bowl protection	**480-25**	**480-216**
Plastic bowl	**493-7**	**491-110**
Activated-charcoal filter element with seal	**493-2**	**493-102**

Technical data

	size I		size II		
Connection threads	G 1/4	G 3/8	G 1/2	G 3/4	G 1**
Nominal rates of flow (Nl/min)*	800	1000	1200	1300	1300
Residual oil content	0,003 mg/m³				
Air quality to ISO 8573.1	Class 1 dirt, Class 1 oil				
Max. operating pressure (p_1)	16 bar / 20 bar with metal bowl				
Max. operating temperature	50 °C / 80 °C with metal bowl				
Material - housing	zinc alloy				
- bowl	polycarbonate				
Weight	320 g	320 g	900 g	900 g	1400 g

* Measured at 7 bar pre-pressure (p_1) and Δp = 0,1 bar
** Inlet and outlet only with mounting plates set G1 (included, see page 20)

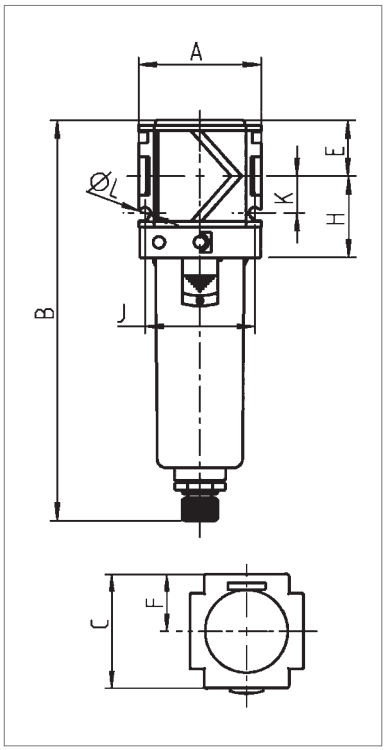

Rates of flow

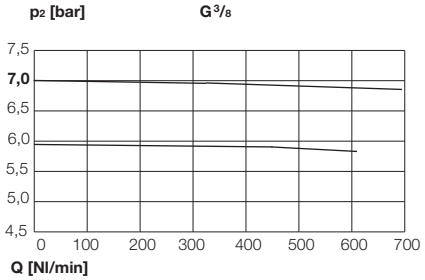

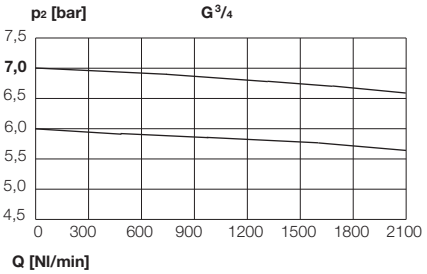

Dimensions [mm]

Size	I	II	
Connection thread	G 1/4, G 3/8	G 1/2, G 3/4	G 1*
A	48	70	125
B	142	193	193
C	48	70	70
E	22	26	26
F	24	35	35
H	32	44	44
J	43	62	62
K	14,5	18	18
L (ø)	4,4	5,4	5,4

Fixing- and assembly-possibilities see page 20

ООО "ПРОВЕРТ" www.prowert.ru info@prowert.ru +7 (495) 188-05-88

Pressure regulators type 481 - G 1/4 – G 1

Cover in individual color
available upon request (standard: grey)!

Note: Gauge
(self-sealing) added loosely

Pressure regulators (diaphragm type) of compact block design in two sizes. Facilities on both sides for flange mounting of further units. Panel mounting, direct mounting or bracket mounting on housing or cover. These units are, of course, fitted with a secondary exhaust (self-relieving) and are largely unaffected by fluctuations in primary pressure. Three pressure ranges are available, up to 6, 10 or 16 bar; regulators are also available without pressure gauges. Simple locking of setting by pressing in handwheel. Version available with keylockable handwheel. Pressure gauge can be mounted on either side. Important: Use of filter always recommended.

Standard version:

Control range (p_2) 0,5-10 bar, with gauge

Size	Order No. Connection threads G 1/4	G 3/8	G 1/2	G 3/4	G 1**
I	**481.223**	**481.233**	-	-	-
II	-	-	**481.263**	**481.283**	**481.293**

Order key for all variants:

for example:
***481.223** – but **without gauge** = 481.**4**23*

481.xxxx

- **A** – lockable, with padlock
- **D** – gauge with color code, 0 -16 bar

additional options

- **2** – 0,5 - 6 bar
- **3** – 0,5 - 10 bar
- **4** – 0,5 - 16 bar

control range (p_2)

- **2** – G 1/4
- **3** – G 3/8

size I

- **6** – G 1/2
- **8** – G 3/4
- **9** – G 1**

size II

connection threads

- **2** – with gauge
- **4** – without gauge

Spare parts

		Order No. size I	size II
Gauge horizontal, ø40 (size I) ø50 (size II)	scales: 0 - 10 bar *(for p_2 up to 6 bar)*	**723**	**55**
	0 - 16 bar *(for p_2 up to 10 bar)*	**734**	**85**
	0 - 25 bar *(for p_2 up to 16 bar)*	**745**	**96**
Diaphragm complete with slip ring		**480-92**	**480-263**
Seal cone complete		**481-17**	**480-218**

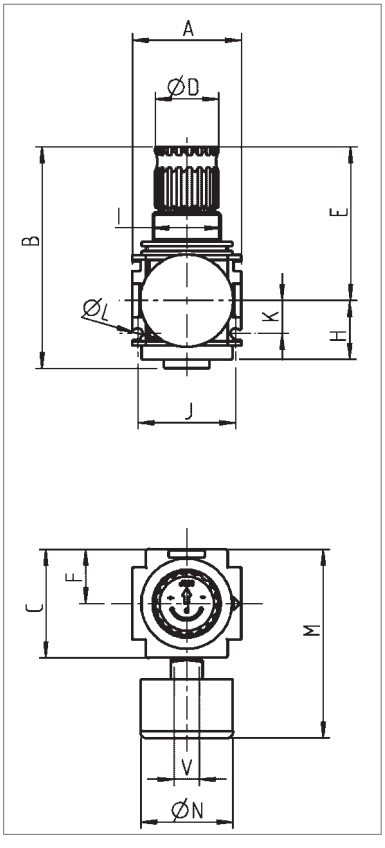

Technical data

	size I		size II		
Connection threads	G 1/4	G 3/8	G 1/2	G 3/4	G 1**
Nominal rates of flow (Nl/min)*	2000	3200	7000	8000	8000
Max. operating pressure (p_1)	25 bar				
Secondary pressure (p_2) max.	10 bar (opt. 6, 16 bar)				
Max. operating temperature	80 °C				
Material - housing	zinc alloy				
- seals	NBR				
Weight (without gauge)	390 g		950 g	950 g	1410 g

* Measured at 10 bar pre-pressure (p_1), 6 bar secundary pressure (p_2) and Δp = 1 bar acc. to DIN ISO 6953
** Inlet and outlet only with mounting plates set G1 (included, see page 20)

Rates of flow

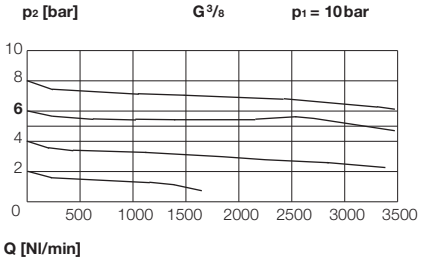

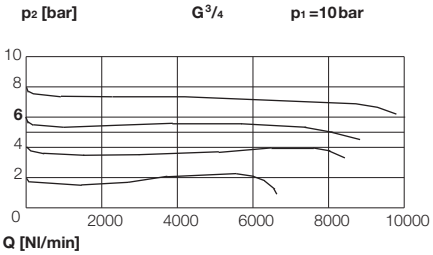

Dimensions [mm]

Size	I	II	
Connection thread	G 1/4, G 3/8	G 1/2, G 3/4	G 1**
A	48	70	125
B	98	134	134
C	48	70	70
D (ø)	28	39	39
E	68	98	98
F	24	35	35
H	26	33	33
I	M30x1,5	M42x1,5	M42x1,5
J	43	62	62
K	14,5	18	18
L (ø)	4,4	5,4	5,4
M	84	106	106
N (ø)	40	50	50
V	G 1/4	G 1/4	G 1/4

Fixing- and assembly-possibilities see page 20

000 "PROMPNEVMATIKA" www.pnevmatika.ru info@pnevmatika.ru +7 (495) 726-47-42

Precision pressure regulators type 495 - G 1/4 – G 1

Pressure regulator with a **precise regulation for highest demands**. It is suitable for all processes that require a precise regulation of compressed air. Pressure regulators as "diaphragm type" do regulate changing line pressure in the air system (inlet pressure p_1) independent of pressure fluctuations and air consumption. It is mostly constant at a working pressure set (secundary pressure p_2). This guarantees optimal and economical operation of the system. This type has an exceptional little **air consumption of 1,5 l/min** – this is almost unique. The built-in excess pressure valve (secondary venting) allows a reduction of the seondary pressure (= exhaust) without air extraction. At the same time compressed air escapes into the atmosphere, as soon as the pressure on the secondary side exceeds the set value. To avoid contamination or loss, there should be a *micro-filter* pre-connected.

495.224

Cover in individual color
available upon request (standard: grey)!

Note: Gauge
(self-sealing) added loosely

Standard version:

Control range (p_2) 0,5-10 bar, with gauge

Size	Order No. Connection threads G 1/4	G 3/8	G 1/2	G 3/4	G 1**
I	**495.224**	**495.234**	-	-	-
II	-	-	**495.264**	**495.284**	**495.294**

Order key for all variants:

495.xxxx

- **A** – lockable, with padlock — *additional option*
- **2** – 0,1 - 3 bar
  3 – 0,2 - 6 bar
  4 – 0,5 - 10 bar — *control range (p_2)*
- **2** – G 1/4
  3 – G 3/8 — ***size I***
  6 – G 1/2
  8 – G 3/4
  9 – G 1** — ***size II***
  — *connection threads*
- **2** – with gauge
  4 – without gauge

for example:
495.223 *– but* ***without gauge*** *= 495.4223*

Spare parts

			Order No. size I	size II
Gauge horizontal, ø40 (size I)	scales:	0 - 4 bar *(for p_2 up to 3 bar)*	**401**	**501**
		0 - 6 bar *(for p_2 up to 6 bar)*	**402**	**502**
ø50 (size II)		0 - 10 bar *(for p_2 up to 10 bar)*	**403**	**503**
Diaphragm complete with slip ring			**495-101**	**495-201**
Seal cone complete			**481-17**	**480-218**

Technical data

	size I		size II		
Connection threads	G 1/4	G 3/8	G 1/2	G 3/4	G 1**
Nominal rates of flow (Nl/min)*	2000	3200	7000	8000	8000
Max. operating pressure (p_1)	25 bar				
Secondary pressure (p_2) max.	10 bar (opt. 3,6 bar)				
Max. operating temperature	-10 up up to +60 °C				
Flow direction of flow	see arrow				
Dependence upon pre-pressure	< 3 %				
Reversing control hysteresis	< 0,1 bar				
Air consumption (measured at 10 bar pre-pressure (p_1))	< 1,0 l/min				
Material - housing	zinc alloy				
- seals	NBR				
Weight (without gauge)	390 g		950 g	950 g	1410 g

* Measured at 10 bar pre-pressure (p_1), 6 bar secundary pressure (p_2) and Δp = 1 bar acc. to DIN ISO 6953
** Inlet and outlet only with mounting plates set G 1 (included, see page 20)

Rates of flow

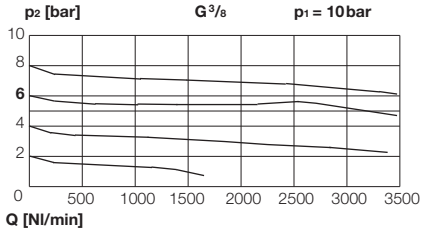

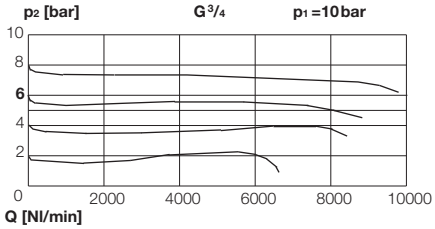

Dimensions [mm]

Size	I	II	
Connection thread	G 1/4, G 3/8	G 1/2, G 3/4	G 1**
A	48	70	125
B	98	134	134
C	48	70	70
D (ø)	28	39	39
E	68	98	98
F	24	35	35
H	26	33	33
I	M30x1,5	M42x1,5	M42x1,5
J	43	62	62
K	14,5	18	18
L (ø)	4,4	5,4	5,4
M	84	106	106
N (ø)	40	50	50
V	G 1/4	G 1/4	G 1/4

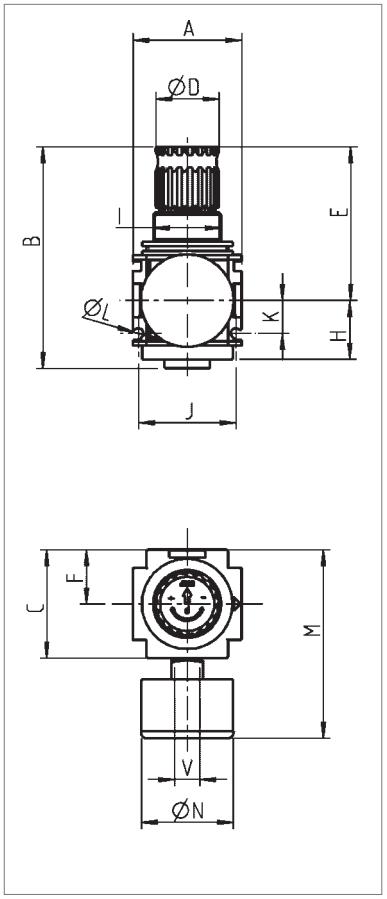

ООО "ПРОМЭЛ" www.promel.ru info@promel.ru +7 (495) 788-05-88

Battery regulators type 490 - G 1/4 – G 1

490.223
490.223D

Cover in individual color available upon request (standard: grey)!

Note: Gauge (self-sealing) added loosely

These kind of regulators are equipped with a continious pressure supply. The pressure inlet can be selected on left or right side, so it can be used for "battery mounting". The attached regulators offer independent and different pressure adjustments because the supply pressure is existing on both sides of the unit (connection no. 1). The working pressure (secondary pressure), which is kept almost constantly, regardless of pressure fluctuations (inlet pressure) in the system and air consumption, is available on the backside connection (connection no. 2).
The regulator (diaphragm type) is fitted with a secondary exhaust (self-relieving) to reduce the working pressure without air extraction. Contamination and damage can be avoided if a filter model 482 is installed. We recommend to use the units G 3/8 or G 3/4 as they have the higher flow capacity.
Important: Use of filter always recommended.

Standard version: :

Control range (p_2) 0,5-10 bar, with gauge

Size	Order No. Connection threads G 1/4	G 3/8	G 1/2	G 3/4	G 1**
I	**490.223**	**490.233**	**-**	**-**	**-**
II	**-**	**-**	**490.263**	**490.283**	**490.293**

Order key for all variants:

490.xxxx

- **A** – lockable, with padlock
- **D** – gauge with color code 0 -16 bar
- *additional options*
- **2** – 0,5 - 6 bar
- **3** – 0,5 - 10 bar
- **4** – 0,5 - 16 bar
- *control range (p_2)*
- **2** – G 1/4 — ***size I***
- **3** – G 3/8
- **6** – G 1/2 — ***size II***
- **8** – G 3/4
- **9** – G 1**
- *connection threads*
- **2** – with gauge
- **4** – without gauge

for example:
***490.233** – but **without gauge** = 490.**4**33*

Spare parts

			Order No. size I	size II
Gauge horizontal,	scales:	0 - 10 bar *(for p_2 up to 6 bar)*	**723**	**55**
ø 40 (size I)		0 - 16 bar *(for p_2 up to 10 bar)*	**734**	**85**
ø 50 (size II)		0 - 25 bar *(for p_2 up to 16 bar)*	**745**	**96**
Plug with female hexagon	connection threads	G 1/4	**280-127**	**280-127**
		G 3/8	**447-28**	**-**
		G 1/2	**-**	**424-67**
Diaphragm complete with slip ring			**480-92**	**480-263**
Seal cone complete			**481-17**	**480-218**

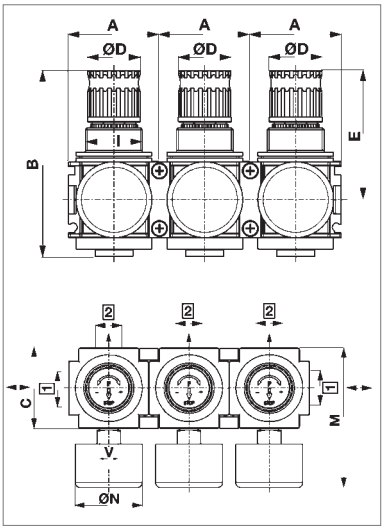

function

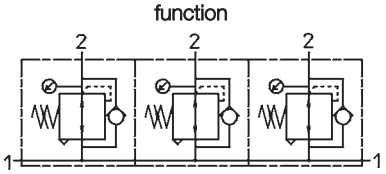

Technical data

	size I		size II		
Connection 1	G 1/4	G 3/8	G 1/2	G 3/4	G 1**
Connection 2	G 1/4	G 1/4	G 1/2	G 3/4	G 3/4
Nominal rates of flow (Nl/min)*	1.800	1.800	5.800	6.800	6.800
Max. operating pressure (p_1)	25 bar				
Outlet pressure (p_2) max.	10 bar (opt. 6, 16 bar)				
Max. operating temperature	+80 °C				
Material - housing	zinc alloy				
- seals	NBR				
Weight (without gauge)	390 g	390 g	950 g	950 g	1.410 g

* Measured at 10 bar pre-pressure (p_1), 6 bar secundary pressure (p_2) and Δp = 1 bar acc. to DIN ISO 6953
** Inlet and outlet only with mounting plates set G1 (included, see page 20)

Rates of flow

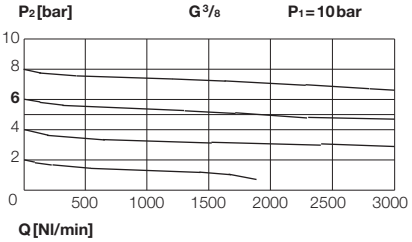

Dimensions [mm]

Size	I	II	
Connection thread	G 1/4, G 3/8	G 1/2, G 3/4	G 1**
A	48	70	125
B	98	134	134
C	48	70	70
D (ø)	28	39	39
E	68	98	98
F	24	35	35
I	M30x1,5	M42x1,5	M42x1,5
M	84	106	106
N (ø)	40	50	50
V	G 1/4	G 1/2 + G 3/4	G 3/4

Fixing- and assembly-possibilities see page 20

ООО "ПРОВЕРТ" www.prowert.ru prog@prowert.ru +7 (495) 108-05-38

Lubricators type 483 - G 1/4 – G 1

Lubricators add a fine oil fog to the compressed air, this effecting a constant and reliable lubrication of pneumatically controlled compressed air tools, valves and cylinders etc... Refilling oil while under pressure is possible. Needle valve for oil adjustment with high drop constancy for long periods of time. Also available with metal sight dome.

Standard version:

With plastic bowl, without drain valve

Size	Order No. Connection threads G 1/4	G 3/8	G 1/2	G 3/4	G 1**
I	**483.022**	**483.023**	-	-	-
II	-	-	**483.026**	**483.028**	**483.029**

Cover in individual color
available upon request (standard: grey)!

Order key for all variants:

483.xxxx

- plastic bowl *(without addition)*
- **M** – metal bowl
- **S** – metal bowl protection

additional options

- **2** – G 1/4
- **3** – G 3/8

size I

- **6** – G 1/2
- **8** – G 3/4
- **9** – G 1**

size II

connection threads

- **2** – [*model: lubricator*]
- **0** – without drain valve
- **1** – with manually operated drain valve

for example:

***483.022** – but **with manually operated drain valve** = 483.**1**22*

Spare parts and accessories

	Order No. size I	size II
Metal bowl without drain valve	**483-10**	**483-113**
Metal bowl with manually operated drain valve	**480-28**	**480-213**
Metal bowl protection	**480-25**	**480-216**
Plastic bowl with bowl protection	**483-24**	-
Plastic bowl without drain valve	**483-7**	**483-110**
Oil regulating valve, metal	**483-21**	**423-65**
Oil regulating valve, plastic	**483-6**	**423-179**
Regulation insert	**483-3**	-

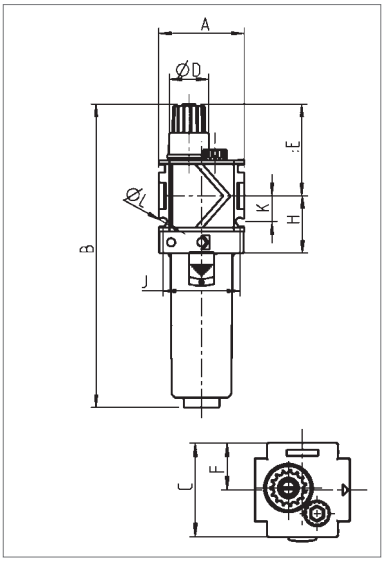

Technical data

		size I		size II		
Connection threads		G 1/4	G 3/8	G 1/2	G 3/4	G 1**
Nominal rates of flow (Nl/min)*		3400	4400	4600	7500	7500
Max. operating pressure (p_1)		16 bar / 20 bar with metal bowl				
Max. operating temperature		50 °C (80 °C with metal bowl and oil regulating valve)				
Effective bowl volume		50 cm³		125 cm³		
Lubricator function		ab 50 l/min		ab 150 l/min		
Sort of oil		nach DIN 51524 - ISO VG 32				
Material	- housing	zinc alloy				
	- bowl	polycarbonate				
	- seals	NBR				
Weight		300 g		800 g	800 g	1260 g

* Measured at 6 bar pre-pressure (p_1) and Δp = 1 bar acc. to DIN ISO 6953

** Inlet and outlet only with mounting plates set G1 (included, see page 20)

Rates of flow

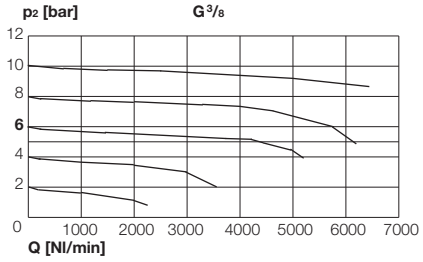

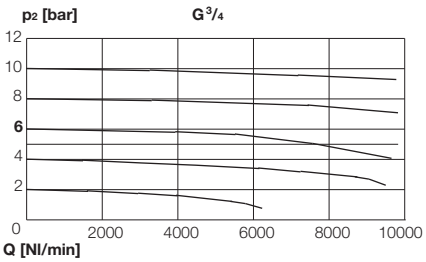

Dimensions [mm]

Size	I	II	
Connection thread	G 1/4, G 3/8	G 1/2, G 3/4	G 1**
A	48	70	125
B	171	224	224
C	48	70	70
D (ø)	22	22	22
E	52	57	57
F	24	35	35
H	32	44	44
J	43	62	62
K	14,5	18	18
L (ø)	4,4	5,4	5,4

Recommended oil: Oil containers made of plastic (polycarbonate) are attached by oil additives, anti-frost or synthetic oils. We therefore recommend normal lubricating oils of approx.. **22 bis 32 cSt** at 40°C (in the case of striking tools up to 68 cSt). Metal containers should be used for other oils, especially for low-temperature oils. Also recommended is a metal lubricator adjusting cap.

ewo Compressed air special oil

Oils see chapter 10.

Container	Order No.
Volume 1 liter	**583**
Volume 5 liter	**583.1**

Fixing- and assembly-possibilities see page 20

ООО "ПРОМЭЛ" www.promel.ru info@promel.ru +7 (495) 788-05-88

Filter pressure regulators type 480 - G 1/4 – G 1

Cover in individual color
available upon request (standard: grey)!

Note: Gauge
(self-sealing) added loosely

Filter pressure regulators unique in space-saving model the functions of a filter and a regulator in one piece of equipment. (see single definitions).

Standard version:

Control range (p_2) 0,5-10 bar, plastic bowl with manually operated drain valve, with gauge, filter porosity 40 µm	Order No.				
	Connection threads				
Size	G 1/4	G 3/8	G 1/2	G 3/4	G 1**
I	**480.223**	**480.233**	-	-	-
II	-	-	**480.263**	**480.283**	**480.293**

Order key for all variants:

480.xxxxx

- **V** – Filter porosity 5 µm *(standard: 40µm, without addition)*
  plastic bowl *(without addition)*
- **M** – metal bowl
- **S** – metal bowl protection
- **A** – lockable
- **D** – gauge with color code 0 -16 bar

additional options

- **2** – 0,5 - 6 bar
- **3** – 0,5 - 10 bar
- **4** – 0,5 - 16 bar

control range (p_2)

- **2** – G 1/4
- **3** – G 3/8

size I

- **6** – G 1/2
- **8** – G 3/4
- **9** – G 1**

size II

connection threads

- **2** – manually operated drain valve, gauge
- **3** – internal automatic drain valve, gauge
- **4** – manually operated drain valve, without gauge
- **5** – semi-automatic drain valve, gauge
- **6** – external automatic drain valve A, gauge
- **7** – internal automatic drain valve, without gauge
- **8** – external automatic drain valve A, without gauge
- **9** – semi-automatic drain valve, without gauge

for example:
480.223 *– but* ***without gauge*** *= 480.4223*

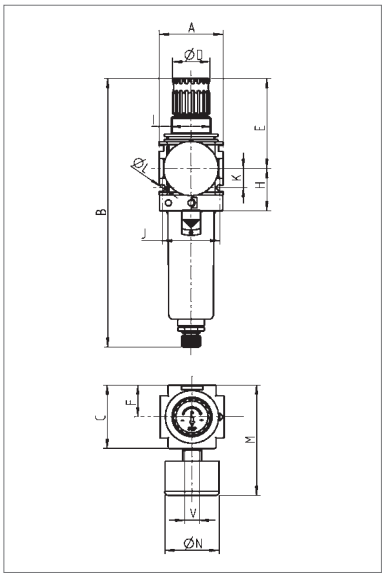

Dimensions [mm]

Size	I	II	
Connection thread	G 1/4, G 3/8	G 1/2, G 3/4	G 1**
A	48	70	125
B	203	273	273
C	48	70	70
D (ø)	28	39	39
E	68	98	98
F	24	35	35
H	32	44	44
I	M30x1,5	M42x1,5	M42x1,5
J	43	62	62
K	14,5	18	18
L (ø)	4,4	5,4	5,4
M	84	106	106
N (ø)	40	50	50
V	G 1/4	G 1/4	G 1/4

Drain valves see page 20 and chapter 8
Fixing- and assembly-possibilities see page 20

Spare parts and accessories

		Order No.	
		size I	size II
Filter element	filter porosity 40 µm (mounted)	**480-7**	**480-219**
	5 µm (reduced flow rate!)	**480-45**	**480-220**
Plastic bowl with metal bowl protection		**480-90**	-
Metal bowl with manually operated drain valve		**480-28**	**480-213**
Metal bowl protection		**480-25**	**480-216**
Gauge horizontal,	scales: 0 - 10 bar *(for p_2 up to 6 bar)*	**723**	**55**
ø 40 (size I)	0 - 16 bar *(for p_2 up to 10 bar)*	**734**	**85**
ø 50 (size II)	0 - 25 bar *(for p_2 up to 16 bar)*	**745**	**96**
Plastic bowl with manually operated drain valve		**480-18**	**480-210**
Diaphragm complete with slip ring		**480-92**	**480-263**
Seal cone complete		**480-48**	**480-218**

Technical data

	size I		size II		
Connection threads	G 1/4	G 3/8	G 1/2	G 3/4	G 1**
Nominal rates of flow (Nl/min)*	2000	3000	5500	6500	6500
Filter porosity	40 µm (optional: 5 µm)				
Max. operating pressure (p_1)	16 bar (20 bar with metal bowl / 12 bar with internal automatic drain valve)				
Secondary pressure (p_2) max.	10 bar (optional: 6, 16 bar)				
Max. operating temperature	50 °C / 80 °C with metal bowl				
Volume of condensate	25 cm³		85 cm³		
Drain valve	manually operated (opt.: semi-automatic, automatic)				
Material - housing	zinc alloy				
- seals	NBR				
- bowl	polycarbonate				
Weight (g) (without gauge)	460		1150	1150	1610

* Measured at 10 bar pre-pressure (p_1), 6 bar secondary pressure (p_2) and Δp = 1 bar acc. to DIN ISO 6953
** Inlet and outlet only with mounting plates set G1 (included, see page 20)

Rates of flow

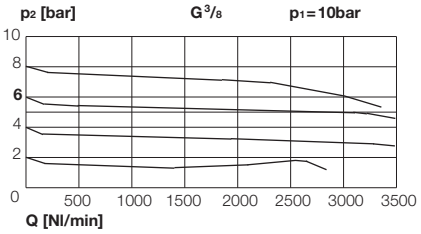

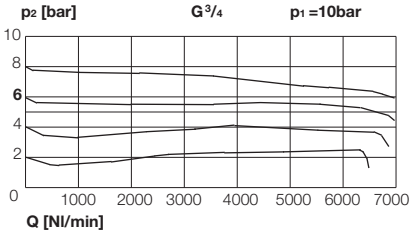

000 "ПРОМЭР" www.promvert.ru promv@promvert.ru +7 (495) 788-03-68

Two-piece maintenance units type 488 - G 1/4 – G 1

The number of possible variations which can be created by simple block-mounting of individual units to form air treatment units is naturally countless. We have listed some of the most frequently used versions of a **2-piece maintenance unit,** consisting of **filter regulator** and **lubricator**. For filters there are options for the bowls and drain valves, for filter regulators there is generally a pressure range of up to 10 bar; various reservoir options are available for the lubricators.

488.230 488.230SD

Cover in individual color available upon request (standard: grey)!

Note: Gauge (self-sealing) added loosely

Standard version:

Control range (p_2) 0,5-10 bar, plastic bowl with manually operated drain valve, with gauge, filter porosity 40µm, block mounting with compact connection set with integrated T-bracket for wall mounting

Size	Order No. Connection threads G 1/4	G 3/8	G 1/2	G 3/4	G 1**
I	488.221	488.231	-	-	-
II	-	-	488.261	488.281	488.291

Order key for all variants:

488.xxxxx

- **V** – filter porosity 5 µm *(standard: 40µm, without addition)*
  plastic bowl *(without addition)*
- **M** – metal bowl
- **S** – metal bowl protection
- **A** – lockable, with padlock
- **D** – gauge with color code 0 -16 bar
  — *additional options*
- **0** – compact connection set
- **1** – compact connection set with T-bracket
- **2** – comfort connection set (only size I)
  — *block mounting*
- **2** – G 1/4
- **3** – G 3/8
  — ***size I***
- **6** – G 1/2
- **8** – G 3/4
- **9** – G 1**
  — ***size II***
  — *connection threads*
- **2** – manually operated drain valve, gauge
- **3** – internal automatic drain valve, gauge
- **4** – manually operated drain valve, without gauge
- **5** – semi-automatic drain valve, gauge
- **6** – external automatic drain valve A, gauge
- **7** – internal automatic drain valve, without gauge
- **8** – external automatic drain valve A, without gauge
- **9** – semi-automatic drain valve, without gauge

Spare parts and accessories

	Order No. size I	size II
Diaphragm complete with slip ring	480-92	480-263
Seal cone complete	481-17	480-218
Regulation insert	483-3	-

For more spare parts and accessories see single units.

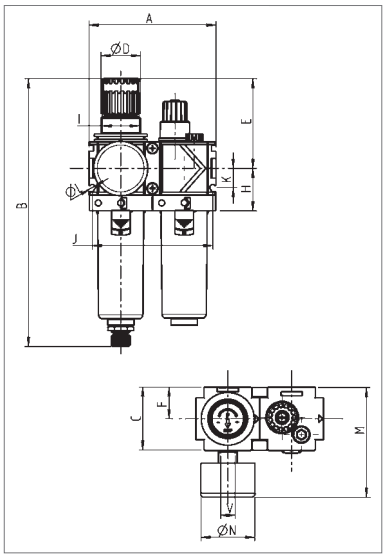

Technical data

	size I		size II		
Connection threads	G 1/4	G 3/8	G 1/2	G 3/4	G 1**
Nominal rates of flow (Nl/min)*	1500	1800	3400	5000	5000
Filter porosity	40 µm (optional: 5 µm)				
Max. operating pressure (p_1)	16 bar/(20 bar with metal bowl / 12 bar with internal automatic drain valve)				
Secondary pressure (p_2) max.	10 bar (opt. 6, 16 bar)				
Max. operating temperature	50 °C / 80 °C with metal bowl and metal oil regulating valve				
Volume of condensate	25 cm³		85 cm³		
Drain valve	manually operated (opt.: semi-automatic, automatic)				
Oil volume	50 cm³		125 cm³		
Lubricator function	> 50 l/min		> 150 l/min		
Material - housing	zinc alloy				
- bowl	polycarbonate				
- seals	NBR				
Weight (without gauge)	720 g		2070 g	2070 g	2530 g

* Measured at 10 bar pre-pressure (p_1), 6 bar secundary pressure (p_2) and Δp = 1 bar acc. to DIN ISO 6953
** Inlet and outlet only with mounting plates set G1 (included, see page 20)
Recommended oil see page 11.

Dimensions [mm]

Size	I	II	
Connection thread	G 1/4, G 3/8	G 1/2, G 3/4	G 1**
A	96	140	195
B	203	273	273
C	48	70	70
D (ø)	28	39	39
E	68	98	98
F	24	35	35
H	32	44	44
I	M30x1,5	M42x1,5	M42x1,5
J	91	132	132
K	14,5	18	18
L (ø)	4,4	5,4	5,4
M	84	106	106
N (ø)	40	50	50
V	G 1/4	G 1/4	G 1/4

Rates of flow

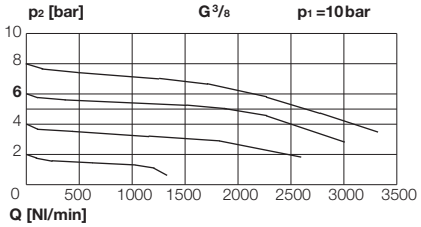

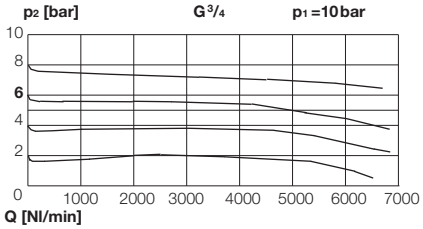

Drain valves see page 20 and chapter 8
Fixing- and assembly-possibilities see page 20

ООО "ПРОВЕРТ" www.prowert.ru info@prowert.ru +7 (495) 188-05-88

Three-piece maintenance units type 489 - G 1/4 – G 1

Cover in individual color
available upon request (standard: grey)!

Note: Gauge
(self-sealing) added loosely

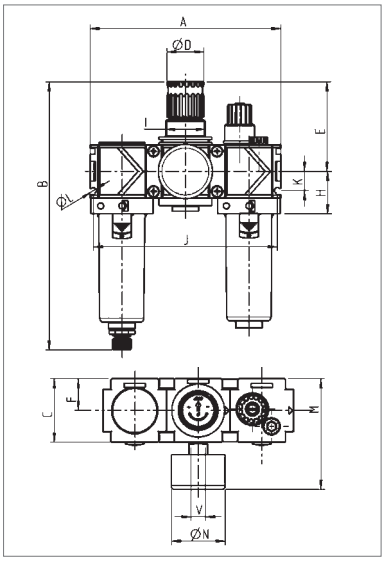

The number of possible variations which can be created by simple block-mounting of individual units to form air treatment units is naturally countless. We have listed some of the most frequently used versions of a **3-piece maintenance unit,** consisting of **filter, pressure regulator** and **lubricator**. For filters there are options for the bowls and drain valves, for filter regulators there is generally a pressure range of up to 10 bar; various reservoir options are available for the lubricators.

Standard version:

Control range (p_2) 0,5-10 bar, plastic bowl with manually operated drain valve, with gauge, filter porosity 40µm, block mounting with compact connection set with integrated T-bracket for wall mounting

	Order No.				
	Connection threads				
Size	G 1/4	G 3/8	G 1/2	G 3/4	G 1**
I	**489.221**	**489.231**	**-**	**-**	**-**
II	**-**	**-**	**489.261**	**489.281**	**489.291**

Order key for all variants:

489.xxxxx

- **V** – filter porosity 5 µm *(standard: 40 µm, without addition)*
  plastic bowl *(without addition)*
- **M** – metal bowl
- **S** – metal bowl protection
- **A** – lockable, with padlock
- **D** – gauge with color code 0 -16 bar
  — *additional options*
- **0** – compact connection set
- **1** – compact connection set with T-bracket
- **2** – comfort connection set (only size I)
  — *block mounting*
- **2** – G 1/4
- **3** – G 3/8
  — ***size I***
- **6** – G 1/2
- **8** – G 3/4
- **9** – G 1**
  — ***size II***
  — *connection threads*
- **2** – manually operated drain valve, gauge
- **3** – internal automatic drain valve, gauge
- **4** – manually operated drain valve, without gauge
- **5** – semi-automatic drain valve, gauge
- **6** – external automatic drain valve A, gauge
- **7** – internal automatic drain valve, without gauge
- **8** – external automatic drain valve A, without gauge
- **9** – semi-automatic drain valve, without gauge

Spare parts and accessories

	Order No.	
	size I	size II
Diaphragm complete with slip ring	**480-92**	**480-263**
Seal cone complete	**481-17**	**480-218**
Regulation insert	**483-3**	**-**

For more spare parts and accessories see single units.

Technical data

	size I		size II		
Connection threads	G 1/4	G 3/8	G 1/2	G 3/4	G 1**
Nominal rates of flow (Nl/min)*	1500	1800	3400	5000	5000
Filter porosity	40 µm (optional: 5 µm)				
Max. operating pressure (p_1)	16 bar (20 bar with metal bowl / 12 bar with internal automatic drain valve)				
Secondary-pressure (p_2) max.	10 bar (opt. 6, 16 bar)				
Max. operating temperature	50 °C / 80 °C with metal bowl and metal oil regulating valve				
Volume of condensate	25 cm³		85 cm³		
Drain valve	manually operated (opt.: semi-automatic, automatic)				
Oil volume	50 cm³		125 cm³		
Lubricator function	> 50 l/min		> 150 l/min		
Material - housing	zinc alloy				
- bowl	polycarbonate				
- seals	NBR				
Weight (without gauge)	1220 g		2800 g	2800 g	3260 g

* Measured at 10 bar pre-pressure (p_1), 6 bar secundary pressure (p_2) and Δp = 1 bar acc. to DIN ISO 6953
** Inlet and outlet only with mounting plates set G1 (included, see page 20)
Recommended oil see page 11.

Dimensions [mm]

Size	I	II	
Connection thread	G 1/4, G 3/8	G 1/2, G 3/4	G 1**
A	144	210	265
B	203	273	273
C	48	70	70
D (ø)	28	39	39
E	68	98	98
F	24	35	35
H	32	44	44
I	M30x1,5	M42x1,5	M42x1,5
J	139	194	194
K	14,5	18	18
L (ø)	4,4	5,4	5,4
M	84	106	106
N (ø)	40	50	50
V	G 1/4	G 1/4	G 1/4

Drain valves see page 20 and chapter 8
Fixing- and assembly-possibilities see page 20

Rates of flow

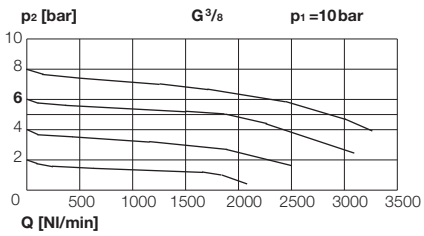

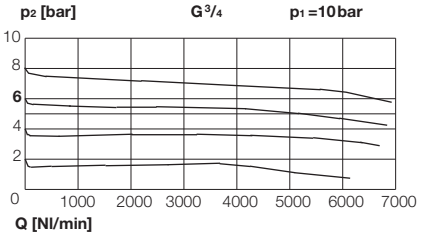

ООО "ПРОВЕРТ" www.prowert.ru prof@prowert.ru +7 (495) 108-05-38

Portable maintenance units type 489 - G 1/2 – G 1

To ensure optimal conditions in regard to cleaning and lubrication of pneumatic tools directly on site, this portable **portable maintenance unit** designed with components from our variobloc line (only for size II). It consists of filter, pressure regulator and lubricator, who are mounted in a metal frame with carrying handle. Other combinations of maintenance units can be mounted upon request. It should be used everywhere, where air distribution and location routes over 5 meters.

Application ranges:
- Truck workshops
- Machine and plant construction
- Shipbuilding and shipyards

Model	Order No. Connection threads G 1/2	G 3/4	G 1
Control range (p_2) 0,5-10 bar, plastic bowl with metal bowl protection and manually operated drain valve, with gauge, filter porosity 40 µm, block mounting with compact connection set, mounting plates set	**489.200**	**489.100**	**489.000**

Spare parts

	Order No. size II
Diaphragm complete with slip ring	**480-263**
Seal cone complete	**480-218**

For more spare parts and accessories see single units.

Cover in individual color
available upon request (standard: grey)!

Technical data

	size II		
Connection threads	G 1/2	G 3/4	G 1
Nominal rates of flow (Nl/min)*	3.400 Nl/min	5.000 Nl/min	5.000 Nl/min
Max. operating pressure (p_1)	16 bar		
Control range (p_2)	0,5 - 10 bar		
Max. operating temperature	50 °C		
Filter porosity	40 µm		
Drain valve	manually operated (opt.: semi-automatic, automatic)		
Volume of condensate	85 cm³		
Oil volume	125 cm³		
Lubricator function	from 150 l/min		
Material - housing	zinc alloy		
- bowl/bowl protection	polycarbonate/steel		
- seals	NBR		
- side parts	painted steel		
- feet	rubber		

* Measured at 6 bar pre-pressure (p_1) and Δp = 1 bar

Rates of flow

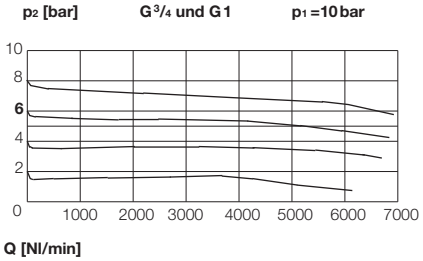

Dimensions [mm]

Size	II	
Connection thread	G 1/2, G 3/4	G 1
A	269	264
B	491	491
C	300	300
D	307	307
E	261	261
F	431	431
H	85,5	85,5
I	55,5	55,5

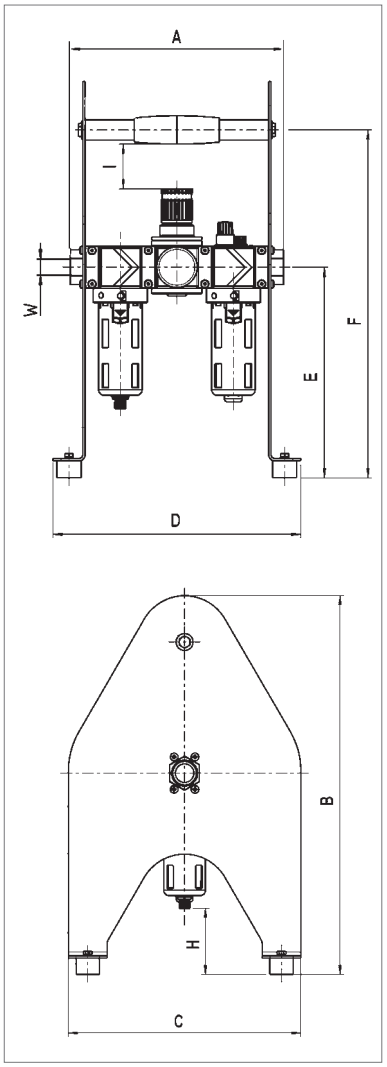

Fixing- and assembly-possibilities see page 20

ООО "ПРОМЭЛ" www.promel.ru info@promel.ru +7 (495) 788-05-88

Ball valves type 487 - G 1/4 – G 1

487.3

487.3D
With padlock
(fig. without padlock!)

487.8P
Version with pneumatic gear

Cover in individual color available upon request (standard: grey)!

Ball valves with exhaust (3/2 directional control valves) for flange-mounting to varioblоc maintenance units are particularly suitable for use at the start of these as main shut-off valves. Actuation by 90 ° rotation of lever, marked clearly with switching position: Lever in transverse direction - valve closed, outlet exhausted (narrower nominal size). Lever in lengthwise: Valve open, exhaust closed. With silencer to reduce exhaust noise. Two sizes with connection threads from G 1/4 to G 1 available. Direct mounting or bracket mounting on the housing is possible. Lockable in both final positions with a regular padlock ø 4,5 mm (or as additional option with padlock (2 versions) available). According to EN983.
Version with pneumatic gear (only size II) enables the application in danger of explosion areas as remote control. The swing construction warrants a high starting linge moment and so a high forming energy (necessary after a long period of down time).

Lockable (without padlock ø 4,5 mm)	**Order No.**				
	Connection threads				
Size	G 1/4	G 3/8	G 1/2	G 3/4	G 1**
I	**487.2**	**487.3**	**-**	**-**	**-**
II	**-**	**-**	**487.6**	**487.8**	**487.9**

Order key for additional options:

487.xx

- **A** – with padlock ø4,5 mm
- **D** – with padlock ø8,0 mm
- **P** – with pneumatic gear (only for size II)

for example:
487.3** with **padlock ø 8,0
*= 487.3**D***

Spare parts and accessories

	Order No.
Padlock ø4,5 mm	**487-17**
Padlock ø8,0 mm	**487-26**

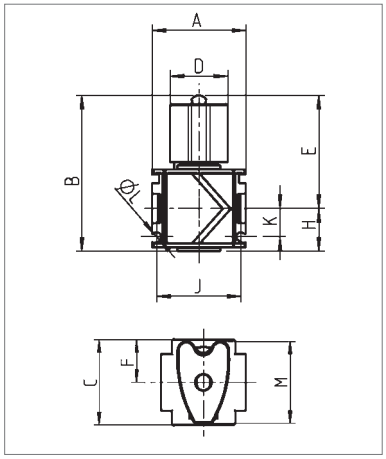

With pneumatic gear

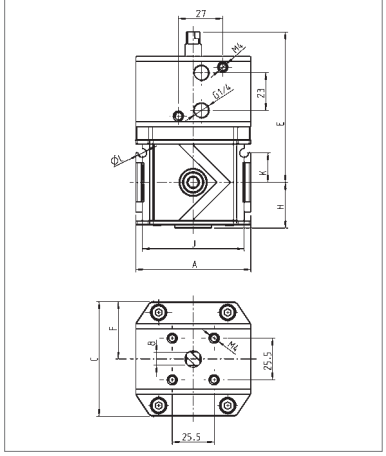

Technical data

	size I		**size II**		
Connection threads	G 1/4	G 3/8	G 1/2	G 3/4	G 1**
Nominal rates of flow (Nl/min)*	4.300	4.400	9.000	11.000	11.000
Max. operating pressure (p_1)	25 bar				
Max. operating temperature	80 °C				
Material - housing	zinc alloy				
Weight	295 g		840 g	840 g	1.300 g
Weight (with pneumatic gear)	–		1.100 g	1.100 g	1.560 g
Pressure range (with pneumatic gear)	–		5,6 - 7,4 bar		

* Measured at 6 bar pre-pressure (p1) and Δp = 1 bar
** Inlet and outlet only with mounting plates set G1 (included, see page 20)

Dimensions [mm]

Size	**I**	**II**			
Connection thread	G 1/4, G 3/8	G 1/2, G 3/4	G 1	G 1/2, G 3/4	G 1**
				with pneum. gear	
A	48	70	125	70	125
B	80	92	92	120	120
C	48	70	70	70	70
D	30	30	30	-	-
E	58	64	64	92	92
F	24	35	35	35	35
H	22	28	28	28	28
J	43	62	62	62	62
K	14,5	18	18	18	18
L (ø)	4,4	5,4	5,4	5,4	5,4
M	45	45	45	-	-

Rates of flow

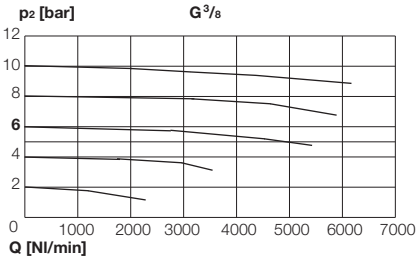

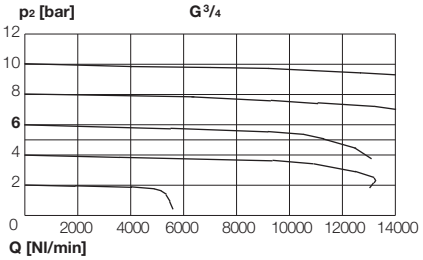

Fixing- and assembly-possibilities see page 20

000 "ПРОМПНЕВМАТ" www.prompneumat.ru prom@prompneumat.ru +7 (495) 788-63-68

3/2-Way starting valves, electrical, type 485 - G1/4 – G1

3/2-way starting valves in modular design for flange-mounting to variobloc-maintenance units. The **magnetic valve** at the inlet thread o the maintenance unit is for main service valve with fast air relieve. The valve is power-free. Without electrical power – valve closed, with manual emergency-operation. Port sizes G1/4 up to G1. Acc. to EN983.

Standard version:

Rated voltage 24V=

Size	Order No. Connection threads G1/4	G3/8	G1/2	G3/4	G1**
I	**485.24**	**485.34**	-	-	-
II	-	-	**485.64**	**485.84**	**485.94**

Cover in individual color available upon request (standard: grey)!

Order key for all variants:

485.xx

- **1** – 24V / 50Hz
- **2** – 220V / 50Hz
- **3** – 110V / 50Hz
- **4** – 24V / =

→ *manual override bistable, DIN43650*

- **5** – 24V / = → *manual override monostable, M12*

- **2** – G1/4
- **3** – G3/8

→ ***size I***

- **6** – G1/2
- **8** – G3/4

→ ***size II***

- **9** – G1**

→ *connection threads*

Spare parts

		Order No. size I	size II
Magnetic coil	24V=	**447-76**	
	24V/50Hz	**447-130**	
	220V/50Hz	**447-74**	
	110V/50Hz	**447-75**	
	24V= (M12)	**447-133**	
Magnetic valve as shut-off valve with speed exhaust.	24V=	**485-16**	
Combination with a starting valve is recommended.	24V/50Hz	**485-17**	
	220V/50Hz	**485-18**	
	110V/50Hz	**485-19**	
	24V= (monostable)	**485-20**	
Female connector DIN43650		**447-120**	

Technical data

	size I		size II		
Connection threads	G1/4	G3/8	G1/2	G3/4	G1**
Nominal rates of flow (Nl/min)*	2200	2600	3300	3800	3800
Working pressure range**	3 - 10bar (higher pressures available upon request)				
Max. operating temperature	50°C				
Protection class	IP65 to DIN40050				
Rated voltage	24V= (opttional 24V/50Hz, 110V/50Hz, 220V/50Hz)				
Electrical thread	female connector acc. to DIN43650, form B ind. PG9				
Material housing	zinc alloy				
Weight	445g		980g	980g	1440g
Waste electrical and electronic equipment	WEEE-Reg.-No.: DE51604370				

* Measured at 6 bar pre-pressure (p_1) and Δp = 1 bar

** Inlet and outlet only with mounting plates set G1 (included, see page 20)

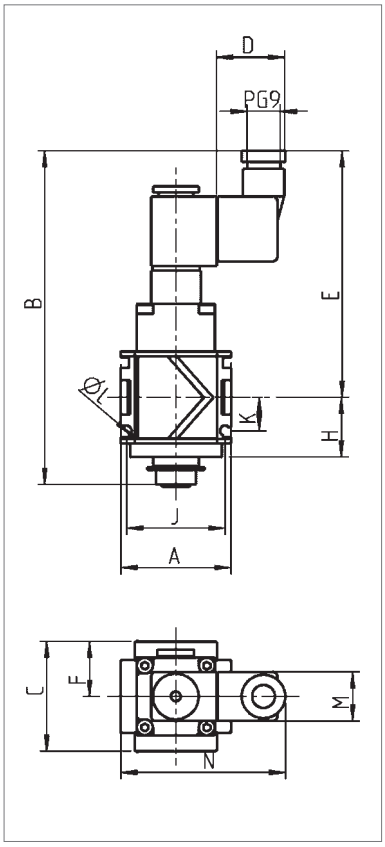

Rates of flow

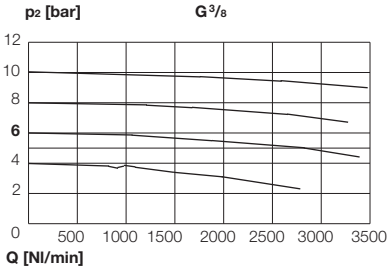

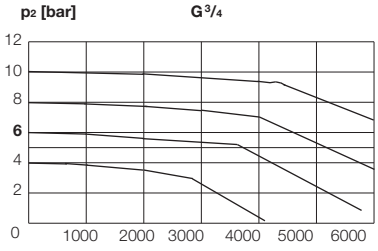

Dimensions [mm]

Size	I	II	
Connection thread	G1/4, G3/8	G1/2, G3/4	G1
A	48	70	125
B	46	157	157
C	48	70	70
D (ø)	30	30	30
E	108	113	113
F	24	35	35
H	26	33	33
J	43	62	62
K	14,5	18	18
L (ø)	4,4	5,4	5,4
M	22	22	22
N	72	82	82

Fixing- and assembly-possibilities see page 20

ООО "ПРОМЭЛ" www.promel.ru info@promel.ru +7 (495) 788-05-88

Distributors type 486 - G 1/4 – G 1

486.30

Cover in individual color
available upon request (standard: grey)!

Distributors with non-return valves are ideal for tapping off unlubricated compressed air when flange-mounted upstream of the lubricator. The non-return valve prevents oil from being taken in from the lubricator or lines. This does, however, mean that the system downstream of the non-return valve cannot readily be exhausted. Two sizes with four outlets and port threads from G 1/4 to G 1.

Standard version:

Without non-return valve

Size	Order No. Connection threads G 1/4	G 3/8	G 1/2	G 3/4	G 1**
I	**486.20**	**486.30**	-	-	-
II	-	-	**486.60**	**486.80**	**486.90**

Order key for all variants:

486.x x

- **0** – without non-return valve
- **1** – with non-return valve
- **2** – G 1/4
- **3** – G 3/8
- **6** – G 1/2
- **8** – G 3/4
- **9** – G 1**

size I (2, 3) / *size II* (6, 8, 9) — *connection threads*

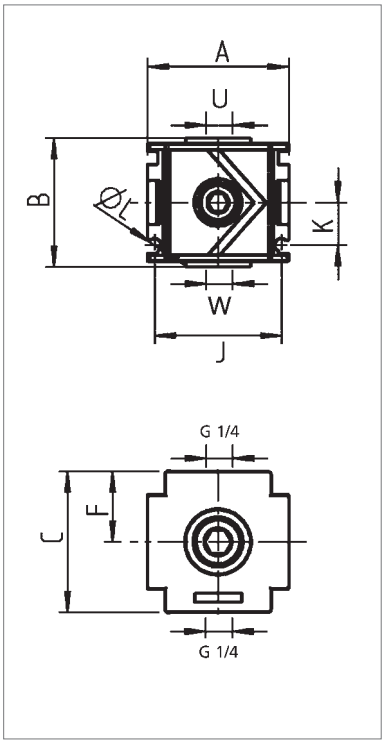

Technical data

	size I		size II		
Connection threads	G 1/4	G 3/8	G 1/2	G 3/4	G1**
Dispatches top / down	G 3/8		G 3/8 / G 1/2		
front + rear	G 1/4		G 1/4		
Nom. rates o. flow without RV (Nl/min)*	4200	5000	9000	11000	11000
Nom. rates o. flow with RV (Nl/min)*	900	900	4000	5000	5000
Max. operating pressure (p_1)	25 bar				
Max. operating temperature	80 °C				
Material housing	zinc alloy				
Weight	290 g		780 g	780 g	1240 g

* Measured at 6 bar pre-pressure (p_1) and Δp = 1 bar.
** Inlet and outlet only with mounting plates set G 1 (included, see page 20)

Dimensions [mm]

Size	I	II	
Connection thread	G 1/4, G 3/8	G 1/2, G 3/4	G1**
A	48	70	125
B	46	56	56
C	48	70	70
F	24	35	35
J	43	62	62
K	14,5	18	18
L (ø)	4,4	5,4	5,4
U	G 3/8	G 3/8	G 3/8
W	G 3/8	G 1/2	G 1/2

Rates of flow

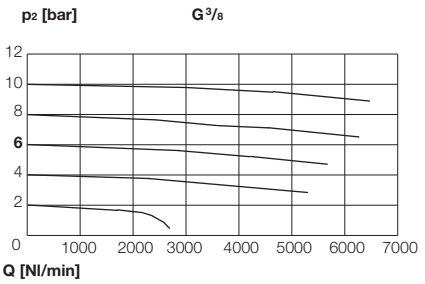

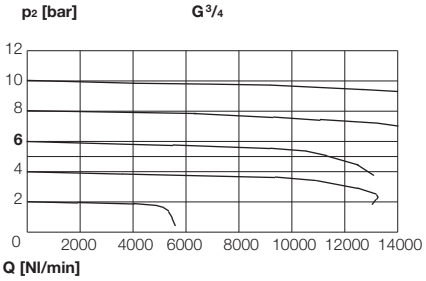

Fixing- and assembly-possibilities see page 20

ООО "ПРОМЭКС" www.promexrus.ru promex@promexrus.ru +7 (495) 788-03-03

Pneumatic starting valves type 484 - G 1/4 – G 1

Starting valves and filling valves in modular block design serve to raise the pressure gradually in pneumatic systems when they are being started, for example after emergency shut-off. When switched on, throttles release at first only a small orifice. Only when the pressure has reached about 60 % of operating pressure is the full orifice opened. In the opposite direction (relieving) the full orifice is opened by means of a non-return valve. In combination with ewo-equipment such as the 3/2-way valve, ball valve or solenoid valve a complete on-and-off unit can be assembled. Connection threads from G 1/4 to G 1. Acc. to EN 983.
Only suitable for closed systems!

Air regulator adjustable	Order No.				
	Connection threads				
Size	G 1/4	G 3/8	G 1/2	G 3/4	G 1**
I	**484.20**	**484.30**	-	-	-
II	-	-	**484.60**	**484.80**	**484.90**

Cover in individual color
available upon request (standard: grey)!

Technical data

	size I		size II		
Connection threads	G 1/4	G 3/8	G 1/2	G 3/4	G 1**
Nominal rates of flow (Nl/min)*	1200	1400	3800	4200	4200
Point of dispatch (profile completely opened)	env. 0,6 x working pressure				
Working pressure range	2 bis 25 bar				
Max. operating temperature	50 °C				
Material housing	zinc alloy				
Weight	295 g		730 g	730 g	1190 g

* Measured at 6 bar pre-pressure (p_1) and Δp = 1 bar
** Inlet and outlet only with mounting plates set G1 (included, see page 20)

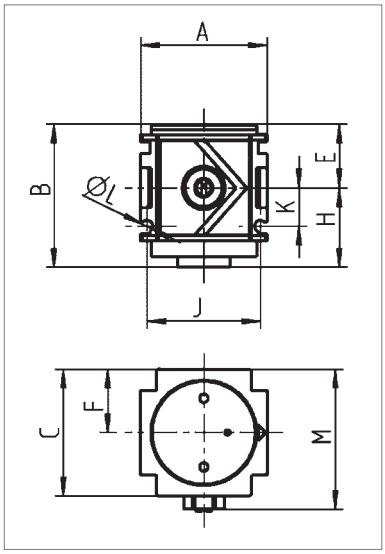

Rates of flow

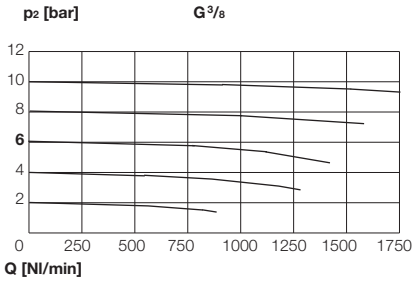

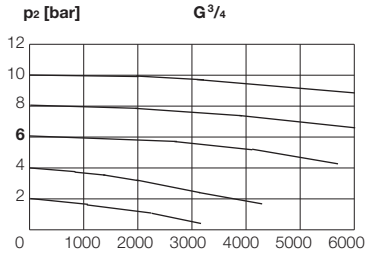

Dimensions [mm]

Size	I	II	
Connection thread	G 1/4, G 3/8	G 1/2, G 3/4	G 1**
A	48	70	125
B	54	72	72
C	48	70	70
E	24	36	36
F	24	35	35
H	30	36	36
J	43	62	62
K	14,5	18	18
L (ø)	4,4	5,4	5,4
M	53	75	75

Fixing- and assembly-possibilities see page 20

ООО "ПРОМЭЛ" www.promel.ru info@promel.ru +7 (495) 788-05-88

Middle modules for block mounting, mounting set for the piping

"Plug and Work" - this is the motto where you can choose your preferred combination from the variety for block mounting, for piping (inlet and outlet) and wall mounting.

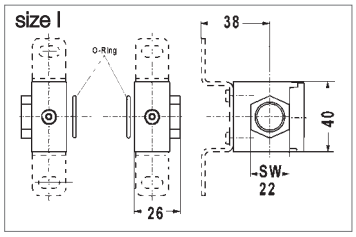

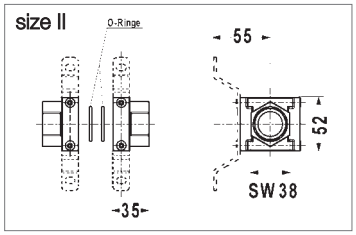

Thread mounting plates set

For the piping. Self-adhesive seals. With or without T-bracket for wall mounting.

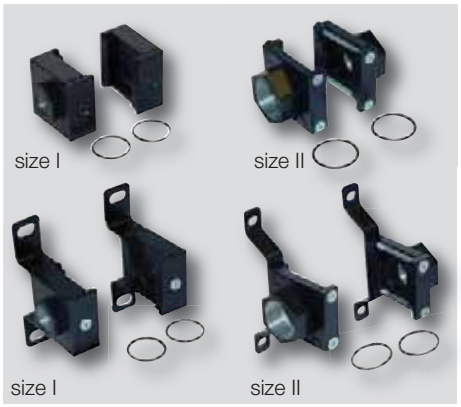

Without T-bracket

Size	Connection threads	Order No.
I	G 1/4	480-75
	G 3/8	480-37
II	G 1/2	480-283
	G 3/4	480-282
	G1	480-271

With T-bracket

Size	Connection threads	Order No.
I	G 1/4	480-120
	G 3/8	480-121
II	G 1/2	480-287
	G 3/4	480-288
	G1	480-289

Comfort connection set (middle module)

For block mounting. Individual modules can be easily removed without having to remove the entire unit. Self-adhesive seals. With or without T-bracket for wall mounting.

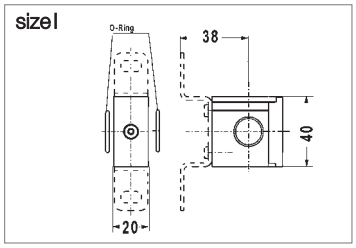

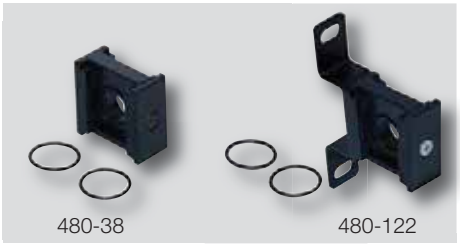

Without T-bracket

Size	Connection threads	Order No.
I	G 1/4	480-38
	G 3/8	

With T-bracket

Size	Connection threads	Order No.
I	G 1/4	480-122
	G 3/8	

Compact connection set (middle module)

For block mounting. Sealing set included. With or without T-bracket for wall mounting.

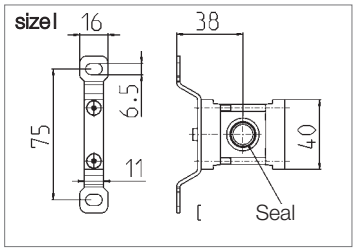

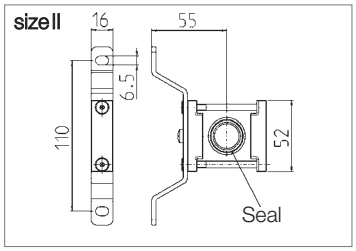

Without T-bracket

Size	Connection threads	Order No.
I	G 1/4	480-570
	G 3/8	480-360
II	G 1/2	480-238
	G 3/4	480-237

With T-bracket

Size	Connection threads	Order No.
I	G 1/4	480-560
	G 3/8	480-350
II	G 1/2	480-264
	G 3/4	480-265

Sealing set for compact connection set

Sleeve + o-ring.

Size	Connection threads	Order No.
I	G 1/4	480-85
	G 3/8	480-11
II	G 1/2	480-267
	G 3/4	480-268

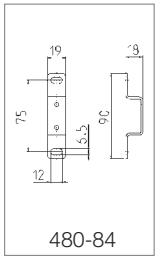

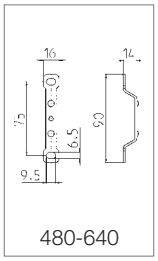

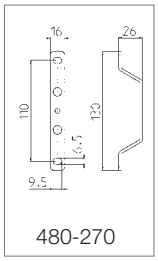

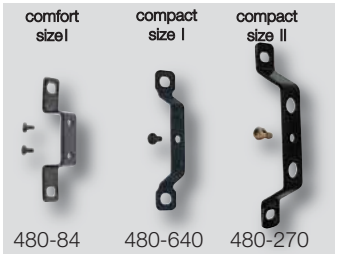

T-bracket (single)

For wall mounting.

Suitable for middle module...	Size	Order No.
Comfort connection	I	480-84
Compact connection	I	480-640
	II	480-270

000 "ПРОВЕРТ" www.proverttc.ru info@proverttc.ru +7 (495) 726-47-42

Wall fasteners

Bracket-set for mounting on cap (handwheel thread)

Content: Bracket + nut.

Suitable for	Order No.
size I	443-36
size II	443-104

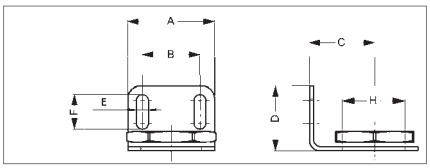

	Dimensions (mm)						
size	A	B	C	D	E	F	H
I	40	26,5	30	30	5,5	16	30,5
II	55	35	42,5	40	7	20	43

443-36

Nut (single)

For mounting on control panel.

Suitable for	Dimensions	Material	Order No.
size I	M30x1,5	PA6	381-32
size II	M42x1,5	Ms	443-106

381-32

Bracket-set for mounting on unit body

Content: Bracket + 2 screws.

Suitable for	Order No.
size I	480-67
size II	480-252

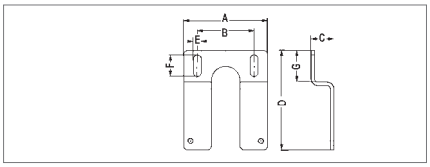

	Dimensions (mm)						
Size	A	B	C	D	E	F	G
I	50	34	15	71	5,5	16	25
II	74	50	20	88	7	19	28

480-252

Screw set (2 pieces)

For direct mounting of single units.

Suitable for	Dimensions	Order No.
size I	2 x M4x40	480-83
size II	2 x M5x60	480-266

480-83

ООО "РОВЕРТ" www.prowert.ru info@prowert.ru +7 (495) 188-05-88

Spare parts and accessory

Filter inserts

Size	Type	Order No.
I	PE-filter element 40 µm	480-7
	PE-filter element 5 µm	480-45
	Micro-filter cartridge, complete	491-4
	Activated carbon filter cartridge, complete	493-2
II	PE-filter element 40 µm	480-219
	PE-filter element 5 µm	490-220
	Micro-filter cartridge, complete	491-103
	Activated carbon filter cartridge, complete	493-102

Bowl options

Model	Type	Order No. size I	Order No. size II
Plastic bowl	With manually operated drain valve	480-18	480-210
	With semi-automatic drain valve	480-78	480-255
	With internal automatic drain valve	480-79	480-256
	With external automatic drain valve A	480-95	480-257
	Without drain valve, for oiler	483-7	483-110
Metal bowl	With manually operated drain valve (up to 20 bar)	480-28	480-213
	With semi-automatic drain valve (up to 20 bar)	480-80	480-258
	With internal automatic drain valve (up to 12 bar)	480-81	480-259
	With external automatic drain valve A (up to 16 bar)	480-96	480-260
	Without drain valve, for oiler (up to 20 bar)	483-10	483-113
Metal bowl protection	For plastic bowl	480-25	480-216

Drain valves (selection)

Model	Material	Connect. thread	Dispatch	Order No.
Drain bolt, plastic		G 1/8 a	-	423-110
Semi-automatic drain valve With insert for plastic and metal bowl		ø14	G 1/8 i	495-100
External automatic drain valve A (4 - 16 bar)	housing + cap brass	G 1/8 a	G 1/8 i	5370.3
For external mounting to e.g. a micro-filter	housing polyamide			5370.4
External automatic drain valve B (1 - 12 bar) An internal automatic drain valve in a housing for external mounting		G 1/8 a	LW5	441.11
Internal automatic drain valve (1 - 12 bar) For bowl with borehole ø14		ø14	LW5	441.1

All drain valves see chapter 8

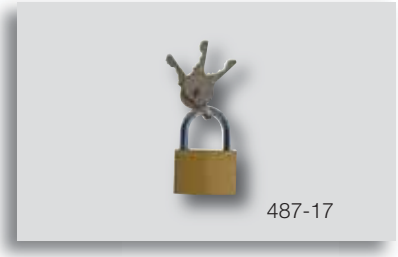

Padlocks

Suitable for	Hanger-ø	Order No.
Pressure regulator and filter pressure regulator size I and II	3,0 mm	480-430
Ball valve model 487.xA	4,5 mm	487-17
Ball valve model 487.xD	8,0 mm	487-26

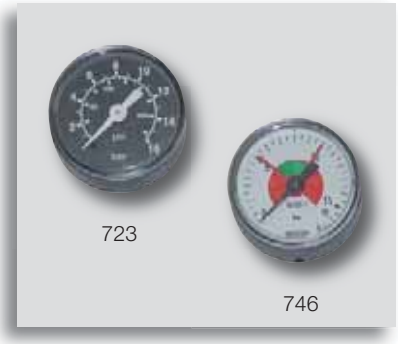

Gauges (selection)

Horizontal. Brass thread, plastic panel. Class 2,5. Tmax 60 °C.

Type	Suitable for	Color (face)	Scale	Order No.
ø40	size I	white on black	0 - 10 bar	723
			0 - 16 bar	734
			0 - 25 bar	745
ø50	size II		0 - 10 bar	55
			0 - 16 bar	85
			0 - 25 bar	96
With color code, ø40	size I	black on white	0 - 16 bar	746
With color code, ø50	size II	(with red/green color code)		105

Alle gauges see chapter 10, page 53 seq.

ООО "ПРОВЕРТ" www.prowert.ru info@prowert.ru +7 (495) 108-05-38

Compressed Air Preparation - combibloc

Combined maintenance unit (3 in 1)	Size I and II	**2 + 3**

ООО "ПРОВЕРТУС" www.provertus.ru info@provertus.ru +7 (495) 103-03-38

Combined maintenance unit - G 1/4 – G 1

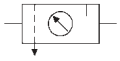

423.243

Combined maintenance unit (3 in 1) consisting of a filter, pressure regulator and lubricator, united in one device in extremely space-saving design!

Components:

Double bowl for filter condensate and oil supply out of plastic (polycarbonate), optionally with bowl protection or metal bowl. **Drain valves** for condensate either as manually-operated, semi-automatic, fully-automatic internal or fully-automatic external drain valve. **Filter elements** out of sintered bronze available with two different pore diameters. **Pressure regulator** with three different pressure ranges. Adjustment can be locked by pressing the handwheel. Version with **lockable handwheel** in arrested state is also available. Bracket mounting possible. Gauge can be mounted on back or front. **Filling oil** under pressure is possible (use a spray oilcan). Available in 2 sizes with connecting threads of G 1/4 to G 1.

Standard versions:

With plastic bowl and manually operated drain valve, with gauge

	Order No.					
	Connection thread size I			Connection thread size II		
Pressure range p_2	G 1/4*	G 3/8*	G 1/2	G 1/2*	G 3/4*	G 1
0,5 - 6 bar	**423.222**	**423.232**	**423.242**	**423.262**	**423.282**	**423.292**
0,5 - 10 bar	**423.223**	**423.233**	**423.243**	**423.263**	**423.283**	**423.293**
0,5 - 16 bar	**423.224**	**423.234**	**423.244**	**423.264**	**423.284**	**423.294**

* Inlet and outlet reduced

Order key for all variants:

423.xxxx

- plastic bowl (standard)
- **M** – metal bowl
- **S** – bowl protection
- **A** – lockable, inc. lock
- **D** – gauge with color identification 0 -16 bar

options

- **2** – 0,5 - 6 bar
- **3** – 0,5 - 10 bar
- **4** – 0,5 - 16 bar

pressure range (p_2)

- **2** – G 1/4*
- **3** – G 3/8*
- **4** – G 1/2

Size I

- **6** – G 1/2*
- **8** – G 3/4*
- **9** – G 1

Size II

connection thread

- **2** – manually operated drain valve, gauge
- **3** – internal automatic drain valve (1 - 12 bar), gauge
- **5** – semi-automatic drain valve (0,5 - 25 bar), gauge
- **6** – external automatic drain valve A (4 - 16 bar), gauge

423-60

423-108

423-296

85

423-282

Accessories

		Order No.	
		Size I	Size II
Bracket mounting for attachment to the housing		**423-60**	**423-102**
Bowl protection		**423-107**	**423-108**
Metal bowl with seal and	manually operated drain valve	**423-296**	**423-297**
	semi-automatic drain valve	**423-298**	**423-299**
	external automatic drain valve A	**423-300**	**423-301**
Oil regulating valve out of	plastic	**423-179**	**423-179**
	metal	**423-65**	**423-65**
Reductions	G 1/2 x G 3/8**	**423-57**	-
	G 1/2 x G 1/4**	**423-58**	-
	G 1 x G 3/4**	-	**423-99**
	G 1 x G 1/2**	-	**423-100**

** Upon request also with NPTF-thread

Main spare parts

Plastic bowl with seal and		manually operated drain valve	**423-282**	**423-283**
		internal automatic drain valve	**423-288**	**423-289**
		semi-automatic drain valve	**423-284**	**423-285**
		external automatic drain valve A	**423-290**	**423-291**
Gauges, horizontal		display range: 0 - 10 bar	**55**	**214**
ø 50: Size I		0 - 16 bar	**85**	**215**
ø 63: Size II		0 - 25 bar	**96**	**216**
Filter element	filter porosity	40 µm (mounted)	**394-6**	**394-16**
		5 µm (reduced flow rate!)	**394-40**	**394-37**
Valve complete with stem			**423-342**	**423-79**
Diaphragm complete with gliding ring			**480-92**	**423-77**

ООО "ПРОВЕН" www.proven.ru info@proven.ru +7 (495) 103-03-38

Technical data

		Size I	Size II
Nominal rates of flow		1400 Nl/min	3400 Nl/min
Max. operating pressure (p_1)	- plastic bowl	16 bar (PN 16)	
	- metal bowl	25 bar (PN 25)	
Operating pressure	- plastic bowl	0 °C up to +50 °C	
	- metal bowl	0 °C up to +90 °C	
Effective bowl volume	- filter	25 cm³	75 cm³
	- lubricator	75 cm³	150 cm³
Mounting position		vertical	
Direction of flow		arrow	
Nominal width		DN 8	DN 15
Dependency upon supply pressure		< 3 %	< 2 %
Reversing control hysteresis		~ 1 bar	
Weight		1255 g	2690 g
Material			
	- seals	NBR	
	- housing	zinc alloy	
	- filter element	sintered bronze	
	- plastic bowl	polycarbonate	

Recommended oil

Oil containers made of plastic (polycarbonate) are attacked by oil additives, anti-frost or synthetic oils. We therefore recommend normal lubricating oils of approx. **22 to 32 cSt** at 40 °C (in the case of striking tools up to 68 cSt). Metal containers should be used for other oils, especially for low-temperature oils. Also recommended is a metal lubricator adjusting cap.

Dimensions [mm]

Size	A	B**	C	E	F	G	J	K	L	M
I	66	200	69	65	34,5	220	82	43	6,5	105
II	93	295	96	105	48	325	112	61	9	135

** with internal automatic drain valve: +10 mm
with semi-automatic drain valve: +10 mm
with external automatic drain valve A: + 90 mm

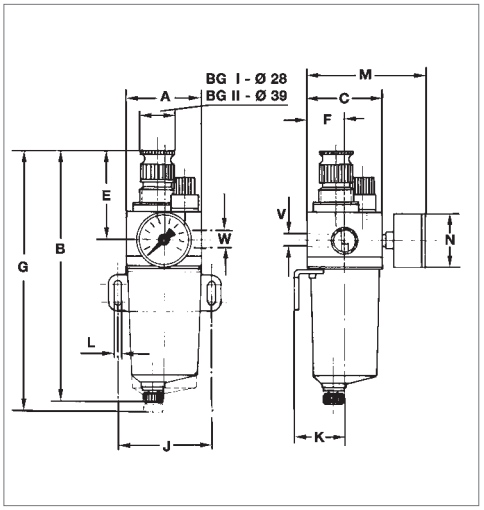

Rates of flow p_1 = 10 bar

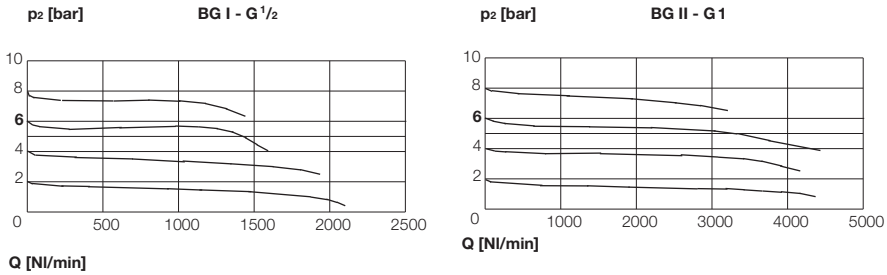

ewo Compressed air special oil

Oils see chapter 10.

Container	Order No.
Volume 1 liter	583
Volume 5 liter	583.1

Drain valves, see chapter 8

ООО "ПРОВЕРТ" www.prowert.ru info@prowert.ru +7 (495) 103-03-38

ООО "ПРОВЕН" www.uprowen.ru info@prowen.ru +7 (495) 108-05-38

Compressed Air Preparation - airvision modular

Filters	2
Micro-filters	3
Pressure regulators	4
Lubricators	5
Filter pressure regulators	6
Two-piece maintenance units	7
Three-piece maintenance units	8
Narrow distributors	9
Distributors for pressure switch	9
Wide distributors	10
Distributors with non-return valve	10
Ball valves	11
Starting valves	12
Solenoid valves	13

Compressed Air Preparation - airvision compact L

Filters	16
Pressure regulators	17
Lubricators	18
Filter pressure regulators	19
Two-piece maintenance units	20
Thr,1ee-piece maintenance units	21

ООО "ТЕХОБЕРТ" www.prowert.ru info@prowert.ru +7 (495) 108-05-38

Filters - G 1/8 – G 1/4

Compressed air filters in modular design for cleansing the compressed air of humidity (by means of cycloning) and solid particles. Can be flanged on either side for additional airvision equipment.
Port sizes G 1/8 and G 1/4.

Standard versions:

With plastic bowl and manually operated drain valve, filter porosity 40 µm

Connection threads	Order No.
G 1/8	445.21*
G 1/4	445.22

* inlet and outlet reduced
(reductions with o-ring added loosely)

Order key for all variants:

445.xx

- **1** – G 1/8
- **2** – G 1/4

connection threads

- **2** – manually operated drain valve (p1 max. 16 bar)
- **3** – internal automatic drain valve (p1 1 - 12 bar)
- **5** – semi-automatic drain valve (p1 0,5 - 16 bar)
- **6** – external automatic drain valve A (p1 4 - 16 bar)
- **7** – external automatic drain valve B (p1 1 - 12 bar)

Spare parts and accessories

		Order No.
Bracket mounting for mounting on housing		444-5
Plastic bowl with seal and	- manually operated drain valve	443-12
	- semi-automatic drain valve	443-42
	- external automatic drain valve A (max. 16 bar)	443-43
	- external automatic drain valve B (max. 12 bar)	443-111
Plastic bowl (long bowl) with seal and internal automatic drain valve (max. 12 bar)		419-78
Filter element	filter porosity 40 µm (mounted)	443-32
	filter porosity 5 µm	443-167
Reduction with o-ring	G 1/4 x G 1/8	443-86

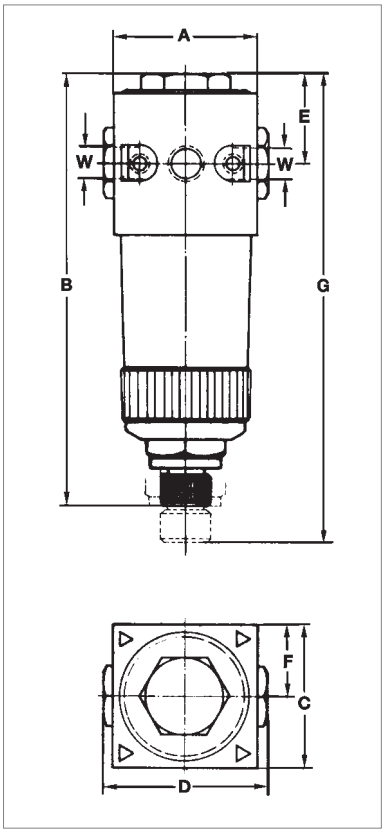

Technical data

Nominal rates of flow (measured at p1 = 6 bar and Δp = 1 bar)		1.170 Nl/min
Max. operating pressure (p1)		16 bar
Operating temperature		0 °C up to +50 °C
Effective bowl volume		10 cm³
Mounting position		vertical
Direction of flow		arrow
Filter porosity		40 µm
Nominal width		DN 6
Nominal pressure (housing)		PN 25
Weight		230 g
Material	- seals	NBR
	- housing	zinc alloy
	- filter element	polyethylene
	- plastic bowl	polycarbonate

Dimensions [mm]

Connection threads	G 1/8*	G 1/4
A	40	40
B**	120	120
C	40	40
D	46	40
E	25	25
F	20	20
G	150	150

* inlet and outlet reduced
(reductions with o-ring seperately included)

** with internal automatic drain valve: +40 mm
with semi automatic drain valve: +10 mm
with external automatic drain valve A: +90 mm
with external automatic drain valve B: +75 mm

Rates of flow

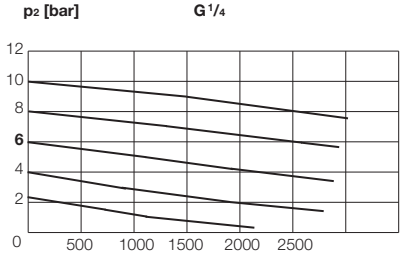

Condensate drain valves see chapter 8

ООО "ПРОВЕРТ" www.prowert.ru info@prowert.ru +7 (495) 108-05-38

Micro-filters - G 1/8 – G 1/4

Fine filter with borosilicate glass microfiber remove almost without residue the smallest remaining particles of water, oil or dirt to 99,999 % (for 0,01 µm). Upstream necessarily normal filter.
Port sizes G 1/8 and G 1/4.

With plastic bowl and manually operated drain valve, filter porosity 0,01 µm

Connection threads	Order No.
G 1/8	453.21*
G 1/4	453.22

* inlet and outlet reduced
(reductions with o-ring added loosely)

Spare parts and accessories

	Order No.
Bracket mounting for mounting on housing	444-5
Plastic bowl long, with seal and manually operated drain valve	419-64
Filter element (micro-filter) with seal filter porosity 0,01µm	448-5
Reduction with o-ring G 1/4 x G 1/8	443-86

Technical data

Nominal rates of flow**		570 Nl/min
Max. operating pressure (p_1)		16 bar
Operating temperature		0 °C up to +50 °C
Effective bowl volume		10 cm³
Filter mesh		0,01 µm
Residual oil content		0,01 ppm
Mounting position		vertical
Direction of flow		arrow
Nominal width		DN 6
Nominal pressure (housing)		PN 25
Weight		230 g
Material	- seals	NBR
	- housing	zinc alloy
	- filter element	borosilicat glass microfiber
	- plastic bowl	polycarbonate

** measured at p_1 = 6 bar and Δp = 1 bar

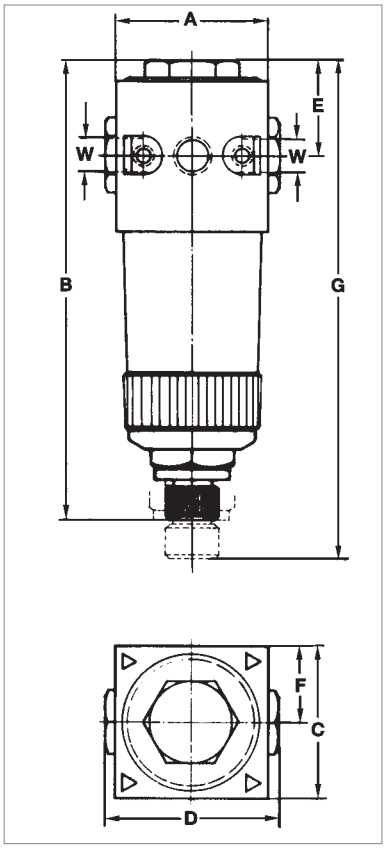

Rates of flow

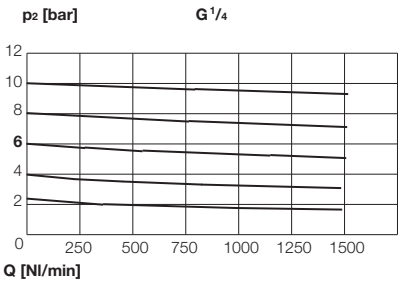

Dimensions [mm]

Connection threads	G 1/8*	G 1/4
A	40	40
B	155	155
C	40	40
D	46	40
E	25	25
F	20	20
G	220	220

* inlet and outlet reduced
(reductions with o-ring seperately included)

ООО "ПРОВЕРТ" www.prowert.ru info@prowert.ru +7 (495) 308-05-38

Pressure regulators - G 1/8 – G 1/4

Compressed air pressure regulators in modular design maintain constant working pressure regardless of pressure fluctuations in the system or of air consumption. Flanging is possible on both sides for adding other airvision equipment. Secondary air exhaust (relieving) and almost complete independence of primary pressure.. Diaphragm regulator with working pressure ranges 0,5 bis 6, 10 und 16 bar. Adjustment can be locked by pressing the handwheel. Gauge can be mounted on back or front. Port sizes G 1/8 and G 1/4.
Important: Use of filter always recommended.

Standard versions:

Control range 0,5 - 10 bar, with gauge

Connection threads	Order No.
G 1/8	**444.213***
G 1/4	**444.223**

* inlet and outlet reduced
(reductions with o-ring added loosely)

Order key for all variants:

444.xxx

- **2** – 0,5 - 6 bar
- **3** – 0,5 - 10 bar
- **4** – 0,5 - 16 bar

control range (p_2)

- **1** – G 1/8
- **2** – G 1/4

connection threads

- **2** – with gauge
- **4** – without gauge

for example:
444.223 *– but* ***without gauge =*** *444.**4**23*

Spare parts and accessories

		Order No.
Bracket-set for mounting on housing (bracket and 2 screws)		**444-5**
Bracket-set for mounting on cap (bracket and nut)		**443-36**
Nut for mounting on control panel		**381-32**
Gauge horizontal, ø40 (G 1/8)	display range: 0 - 10 bar *(for p_2 to 6 bar)*	**670**
	0 - 16 bar *(for p_2 to 10 bar)*	**680**
	0 - 25 bar *(for p_2 to 16 bar)*	**690**
Diaphragm complete with gliding ring		**480-92**
Valve complete with stem		**443-142**
Reduction with o-ring G 1/4 x G 1/8		**443-86**

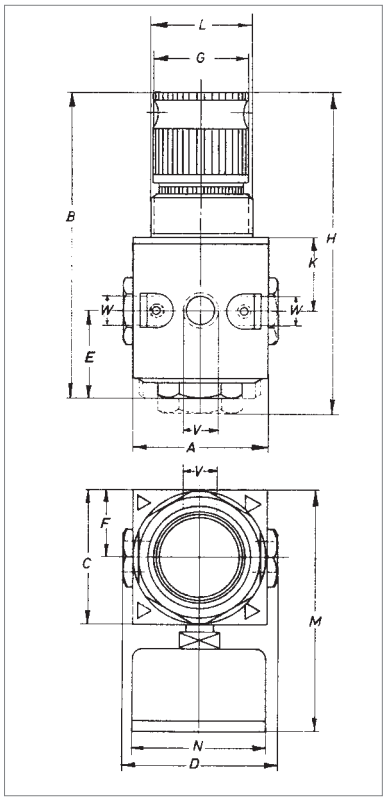

Technical data

Nominal rates of flow**	670 Nl/min
Max. operating pressure (p_1)	25 bar
Control range (p_2)	0,5 to 10 bar (optionally: 6 and 16 bar)
Operating temperature	+50 °C
Mounting position	any
Direction of flow	arrow
Nominal width	DN 6
Dependence upon supply pressure	< 4 %
Reversing control hysteresis	~ 1 bar
Weight	300 g
Material - diaphragm / seals	NBR
- housing	zinc alloy

** measured at p_1 = 8 bar, p_2 = 6 bar and Δp = 1 bar

Dimensions [mm]

Connection threads	G 1/8*	G 1/4
A	40	40
B	90	90
C	40	40
D	46	40
E	25	25
F	20	20
H	105	105
K	22	22
L	M30x1,5	M30x1,5
M	75	75

* inlet and outlet reduced
(reductions with o-ring seperately included)

Rates of flow $p_1 = p_2 + 2$ bar

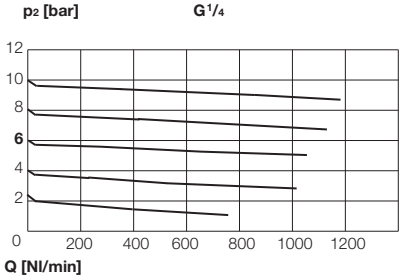

ООО "ПРОВЕРТ" www.prowert.ru info@prowert.ru +7 (495) 108-05-38

Lubricators - G 1/8 – G 1/4

Compressed air lubricator in modular design add a fine oil fog to the compressed air, providing a constant and reliable lubrication of pneumatically regulated compressed air tools, valves and cylinders etc.. Flanging is possible on both sides for adding other airvision equipment. Oil can be refilled under pressure. Needle valve for oil adjustment with high drop constancy over long periods of time. Port sizes G 1/8 and G 1/4.

With plastic bowl, without drain valve

Connection threads	Order No.
G 1/8	**446.01***
G 1/4	**446.02**

* inlet and outlet reduced
(reductions with o-ring added loosely)

Spare parts and accessories

	Order No.
Bracket-set for mounting on housing (bracket and 2 screws)	**444-5**
Plastic bowl without drain valve, with seal	**446-6**
Oil regulating valve metal	**423-65**
Oil regulating valve plastic	**423-179**
Reduction with o-ring G 1/4 x G 1/8	**443-86**

Technical data

Nominal rates of flow**		1.670 Nl/min
Min. flow rate***		30 Nl/min
Max. operating pressure (p_1)		16 bar
Operating temperature		0 °C up to +50 °C
Effective bowl volume		25 cm³
Mounting position		vertical
Direction of flow		arrow
Nominal width		DN 6
Nominal pressure (housing)		PN 25
Weight		270 g
Material	- seals	NBR
	- housing	zinc alloy
	- plastic bowl	polycarbonate

** measured at p_1 = 6 bar and Δp = 1 bar
*** oil delivery 10 droplets/min at 6 bar

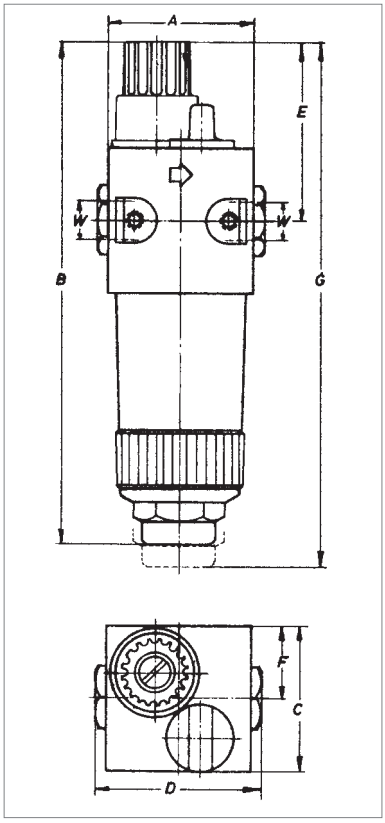

Rates of flow

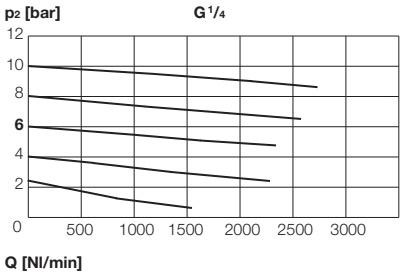

Dimensions [mm]

Connection threads	G 1/8*	G 1/4
A	46	40
B	140	140
C	40	40
D	46	40
E	50	50
F	20	20
G	170	170

* inlet and outlet reduced
(reductions with o-ring added loosely)

Recommended oil: Oil containers made of plastic (polycarbonate) are attacked by oil additives, anti-frost or synthetic oils. We therefore recommend regular lubricating oils of approx. **22 bis 32 cSt** at 40 °C (in the case of striking tools up to 68 cSt). Metal containers should be used for other oils, especially for low-temperature oils. Also recommended is a metal lubricator adjusting cap.

ewo Compressed air special oil

Oils see chapter 10

Container	Order No.
Volume 1 litre	**583**
Volume 5 litre	**583.1**

ООО "ПРОВЕРТ" www.prowert.ru info@prowert.ru +7 (495) 308-05-38

Filter pressure regulators - G 1/8 – G 1/4

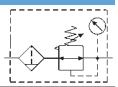

Filters for compressed air and pressure regulators combined in one piece of equipment in modular design to save space. The cleansed compressed air is kept at constant pressure regardless of pressure fluctuations in the system or of air consumption. Secondary air exhaust (relieving) and almost complete independence of primary pressure. Diaphragm regulator with working pressure ranges 0,5 to 6, 10 or 16 bar. Adjustment can be locked by pressing the handwheel. Gauge can be mounted on back or front side. Additional airvision equipment can be flanged to either side. Port sizes G 1/8 and G 1/4.

Standard versions:

Control range 0,5 - 10 bar, plasti bowl with manually operated drain valve, with gauge

Connection threads	Order No.
G 1/8	443.213*
G 1/4	443.223

* inlet and outlet reduced
(reductions with o-ring added loosely)

Order key for all variants:

443.xxx

- **2** – 0,5 - 6 bar
- **3** – 0,5 - 10 bar
- **4** – 0,5 - 16 bar

control range (p_2)

- **1** – G 1/8
- **2** – G 1/4

connection threads

- **2** – with manually operated drain valve (p_1 max. 16 bar)
- **3** – with internal automatic drain valve (p_1 1 - 12 bar)
- **5** – with semi-automatic drain valve (p_1 0,5 - 16 bar)
- **6** – with external automatic drain valve A (p_1 4 - 16 bar)
- **7** – with external automatic drain valve B (p_1 1 - 12 bar)

Spare parts and accessories

			Order No.
Bracket-set for mounting on housing (bracket and 2 screws)			444-5
Bracket-set for mounting on cap (bracket and nut)			443-36
Nut for mounting on control panel			381-32
Plastic bowl with seal and	- manually operated drain valve		443-12
	- semi-automatic drain valve		443-42
	- external automatic drain valve A		443-43
	- external automatic drain valve B		443-111
Plastic bowl, long with seal and	- internal automatic drain valve (max. 12 bar)		419-78
Filter element	filter porosity 40 µm (mounted)		443-32
	filter porosity 5 µm		443-167
Gauge horizontal, ø40	display range	0 - 10 bar	670
		0 - 16 bar	680
		0 - 25 bar	690
Valve complete with stem			443-142
Diaphragm complete with gliding ring			480-92
Reduction with o-ring G 1/4 x G 1/8			443-86

Technical data

Nominal rates of flow (measured at p_1 = 8 bar, p_2 = 6 bar, Δp = 1 bar)		833 Nl/min
Max. operating pressure (p_1)		16 bar
Control range (p_2)		0,5 to 10 bar (optionally: 6 and 16 bar)
Operating temperature		0 °C up to +50 °C
Mounting position		vertical
Direction of flow		arrow
Nominal width		DN 6
Nominal pressure (Gehäuse)		PN 25
Dependence upon supply pressure		< 4 %
Reversing control hysteresis		~ 1 bar
Weight		350 g
Material	- diaphragm / seals	NBR
	- housing	zinc alloy
	- filter element	polyethylene
	- plastic bowl	polycarbonate

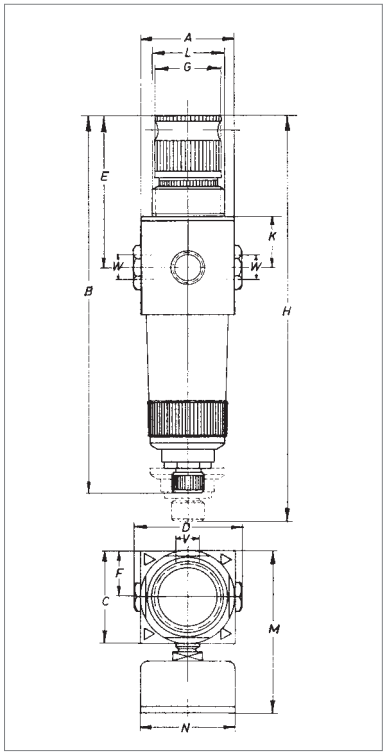

Dimensions [mm]

Connection threads	G 1/8*	G 1/4
A	40	40
B**	170	170
C	40	40
D	46	40
E	65	65
F	20	20
H	190	190
K	22	22
L	M30x1,5	M30x1,5
M	78	78

* inlet and outlet reduced
(reductions with o-ring added loosely)

** with internal automatic drain valve: +40 mm
with semi-automatic drain valve: +10 mm
with external automatic drain valve A: +90 mm
with external automatic drain valve B: +75 mm

Rates of flow $p_1 = p_2 + 2$ bar

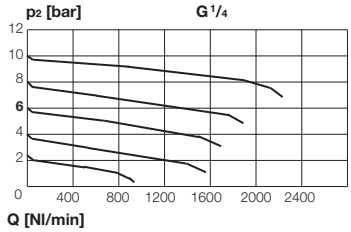

Condensate drain valves see chapter 8

ООО "ПРОВЕРТ" www.prowert.ru info@prowert.ru +7 (495) 108-05-38

Two-piece maintenance units - G 1/8 – G 1/4

A maintenance unit in block assembly consisting of an airvision filter pressure reducer and fog lubricator. Flanging is possible on either side for additional equipment. Other variations are possible by combination with additional equipment. Port sizes G 1/8 and G 1/4.

Standard versions:

Control range 0,5 - 10 bar, plastic bowls, with manually operated drain valve, with gauge

Connection threads	Order No.
G 1/8	**449.21***
G 1/4	**449.22**

* inlet and outlet reduced
(reductions with o-ring added loosely)

Order key for all variants:

449.xx

- **1** – G 1/8
- **2** – G 1/4

connection threads

- **2** – with manually operated drain valve (p1 max. 16 bar)
- **5** – with semi-automatic drain valve (p1 0,5 - 16 bar)
- **6** – with external automatic drain valve A (p1 4 - 16 bar)
- **7** – with external automatic drain valve B (p1 1 - 12 bar)

Accessories

	Order No.
Flange connection kit with seal	**447-1**
Bracket-set for mounting on housing (bracket and 2 screws)	**444-5**
Bracket-set for mounting on cap (bracket and nut)	**443-36**
Reduction with o-ring G 1/4 x G 1/8	**443-86**

Other accessories for Filter pressure regulators see page 6, Lubricators see page 5.

Technical data

Nominal rates of flow**		570 Nl/min
Min. flow rate (oil delivery 10 droplets/min at 6 bar)		30 Nl/min
Max. operating pressure (p1)		16 bar
Control range (p2)		0,5 to 10 bar
Operating temperature		0 °C up to +50 °C
Effective bowl volume	- filter bowl	10 cm³
	- lubricator bowl	25 cm³
Mounting position		vertical
Direction of flow		arrow
Nominal width		DN 6
Dependence upon supply pressure		< 4 %
Reversing control hysteresis		~ 1 bar
Weight		650 g
Material	- diaphragm/seals	NBR
	- housing	zinc alloy
	- filter element	polyethylene
	- plastic bowl	polycarbonate

** measured at p1 = 8 bar, p2 = 6 bar and Δp = 1 bar

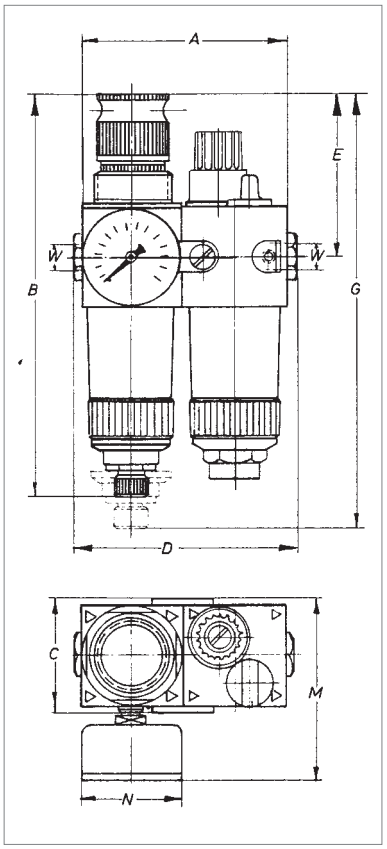

Rates of flow p1=p2+2bar

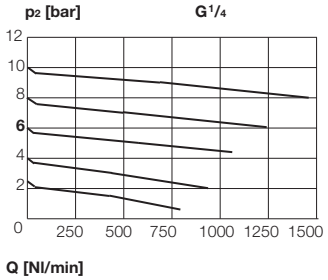

Dimensions [mm]

Connection threads	G 1/8*	G 1/4
A	80	80
B***	160	160
C	44	44
D	86	80
E	65	65
G	190	190
M	78	78

* inlet and outlet reduced
(reductions with o-ring added loosely)

***with internal automatic drain valve: +40 mm
with semi-automatic drain valve: +10 mm
with external automatic drain valve A: +90 mm
with external automatic drain valve B: +75 mm

Recommended oil: Oil containers made of plastic (polycarbonate) are attacked by oil additives, anti-frost or synthetic oils. We therefore recommend regular lubricating oils of approx. **22 bis 32 cSt** at 40 °C (in the case of striking tools up to 68 cSt). Metal containers should be used for other oils, especially for low-temperature oils. Also recommended is a metal lubricator adjusting cap.

ewo Compressed air special oil

Oils see chapter 10

Container	Order No.
Volume 1 litre	**583**
Volume 5 litre	**583.1**

Condensate drain valves see chapter 8

ООО "ПРОВЕРТ" www.prowert.ru info@prowert.ru +7 (495) 308-05-38

Three-piece maintenance units - G 1/8 – G 1/4

A maintenance unit in block assembly consisting of an airvision filter, pressure regulator and fog lubricator. Flanging is possible on either side for additional equipment. Other variations are possible by combination with additional equipment. Port sizes G 1/8 and G 1/4.

Standard versions:

Control range 0,5 - 10 bar, plastic bowls, with manually operated drain valve, with gauge

Connection threads	Order No.
G 1/8	450.21*
G 1/4	450.22

* inlet and outlet reduced
(reductions with o-ring added loosely)

Order key for all variants:

450.xx

- **1** – G 1/8
- **2** – G 1/4

connection threads

- **2** – with manually operated drain valve (p1 max. 16 bar)
- **5** – with semi-automatic drain valve (p1 0,5 - 16 bar)
- **6** – with external automatic drain valve A (p1 4 - 16 bar)
- **7** – with external automatic drain valve B (p1 1 - 12 bar)

Accessories

	Order No.
Flange connection kit with seal	447-1
Bracket-set for mounting on housing (bracket and 2 screws)	444-5
Bracket-set for mounting on cap (bracket and nut)	443-36
Reduction with o-ring G 1/4 x G 1/8	443-86

Other access: for filters see page 2, pressure regulators see page 4, lubricators see page 5

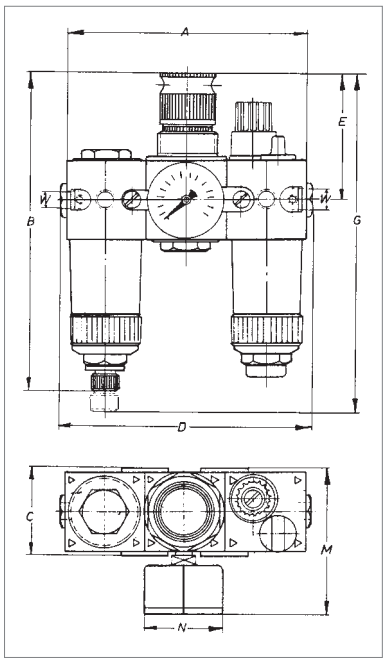

Technical data

Nominal rates of flow**		570 Nl/min
Min. flow rate (oil delivery 10 droplets/min at 6 bar)		30 Nl/min
Max. operating pressure (p1)		16 bar
Control range (p2)		0,5 to 10 bar
Operating temperature		0 °C up to +50 °C
Effective bowl volume	- filter bowl	10 cm³
	- lubricator bowl	25 cm³
Mounting position		vertical
Direction of flow		arrow
Nominal width		DN 6
Dependence upon supply pressure		< 4 %
Reversing control hysteresis		~ 1 bar
Weight		800 g
Material	- diaphragm / seals	NBR
	- housing	zinc alloy
	- filter element	polyethylene
	- plastic bowl	polycarbonate

** measured at p1 = 8 bar, p2 = 6 bar and Δp = 1 bar

Dimensions [mm]

Connection threads	G 1/8*	G 1/4
A	120	120
B***	160	160
C	44	44
D	126	120
E	65	65
G	190	190
M	78	78

* inlet and outlet reduced
(reductions with o-ring added loosely)

****with internal automatic drain valve: +40 mm
with semi-automatic drain valve: +10 mm
with external automatic drain valve A: +90 mm
with external automatic drain valve B: +75 mm

Rates of flow

p1=p2+2 bar

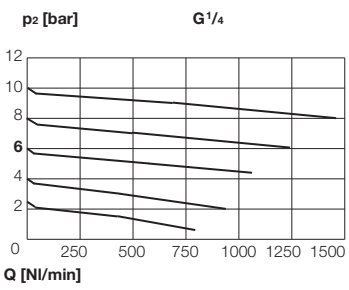

Recommended oil: Oil containers made of plastic (polycarbonate) are attacked by oil additives, anti-frost or synthetic oils. We therefore recommend regular lubricating oils of approx. **22 bis 32 cSt** at 40 °C (in the case of striking tools up to 68 cSt). Metal containers should be used for other oils, especially for low-temperature oils. Also recommended is a metal lubricator adjusting cap.

ewo Compressed air special oil

Oils see chapter 10

Container	Order No.
Volume 1 litre	583
Volume 5 litre	583.1

Condensate drain valves see chapter 8

ООО "ТД ОБЕРТ" www.prowert.ru info@prowert.ru +7 (495) 108-05-38

Narrow distributors - G 1/8 – G 1/4

Distributors in modular design are suitable for flanging at any position onto airvision maintenance units. They have two outlets (above and below), which are plugged upon delivery. Port sizes G 1/8 and G 1/4.

Connection threads	Order No.
G 1/8	**447.01***
G 1/4	**447.02**

* inlet and outlet reduced
(reductions with o-ring added loosely)

Accessories

	Order No.
Flange connection kit with seal	**447-1**
Reduction with o-ring G 1/4 x G 1/8	**443-86**

Technical data

Max. operating pressure (p_1)	25 bar
Operating temperature	-10 °C up to +80 °C
Mounting position	any
Direction of flow	any
Nominal width	DN 6
Weight	130 g
Material (housing)	aluminum

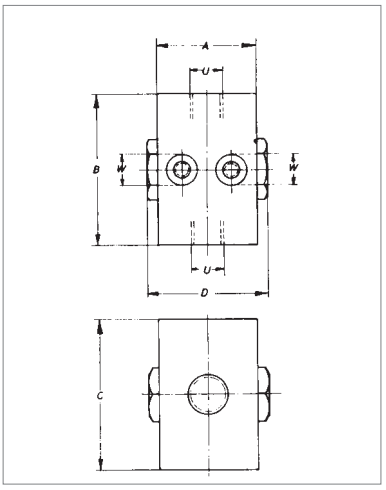

Dimensions [mm]

Connection threads	G 1/8*	G 1/4
A	26	26
B	40	40
C	40	40
D	32	26
U	G 1/4	G 1/4

* inlet and outlet reduced
(reductions with o-ring added loosely)

Distributors for pressure switch - G 1/8 – G 1/4

Distributors for pressure switches in modular design are suitable for flanging at any position onto airvision maintenance units. They have one outlet (below), which is plugged upon delivery, and a connection possibility for pressure switches made by IMI Norgren or Bosch (see below). Port sizes G 1/8 and G 1/4.

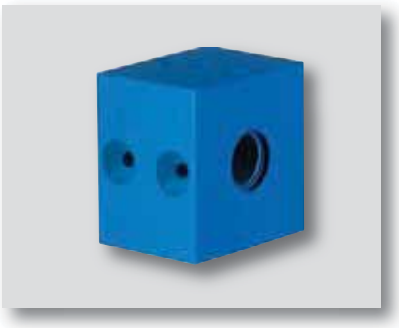

Connection threads	Order No.
G 1/8	**447.11***
G 1/4	**447.12**

* inlet and outlet reduced (reductions with o-ring added loosely)

Accessories

	Order No.
Flange connection kit with seal	**447-1**
Reduction with o-ring G 1/4 x G 1/8	**443-86**

Technical data

Max. operating pressure (p_1)	25 bar
Operating temperature	-10 °C up to +80 °C
Mounting position	any
Direction of flow	any
Nominal width	DN 6
Weight	135 g
Material (housing)	aluminum

Recommended pressure switch

(NOT available in the ewo product range!)

Models from **Bosch Rexroth**	**Models**	Order No. *Bosch Rexroth*
(Please order directly there!)	0,2 - 3 bar	**0821 100 011**
	0,5 - 8 bar	**0821 100 012**
	1,0 -16 bar	**0821 100 013**

Models from **IMI Norgren**	**Models**	Order No. *IMI Norgren*
(Please order directly there!)	0,2 - 3 bar	**0881 200**
	0,5 - 8 bar	**0881 300**
	1,0 -16 bar	**0881 400**

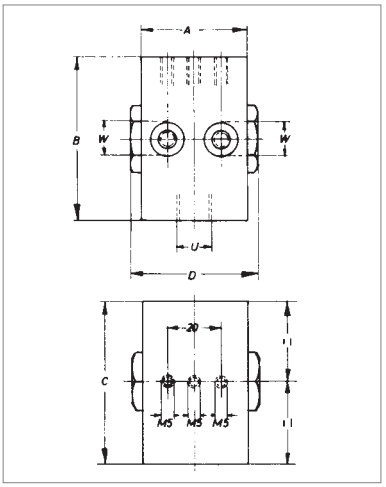

Dimensions [mm]

Connection threads	G 1/8*	G 1/4
A	30	30
B	40	40
C	40	40
D	36	30
U	G 1/4	G 1/4

* inlet and outlet reduced
(reductions with o-ring added loosely)

ООО "ПРОВЕРТ" www.prowert.ru info@prowert.ru +7 (495) 308-05-38

Wide distributors - G 1/8 – G 1/4

Distributors in modular design are suitable for flanging at any position onto airvision maintenance units. They have four outlets, which are plugged upon delivery. Port sizes G 1/8 and G 1/4.

Connection threads	Order No.
G 1/8	447.21*
G 1/4	447.22

* inlet and outlet reduced
(reductions with o-ring added loosely)

Accessories

	Order No.
Flange connection kit with seals	447-1
Reduction with o-ring G 1/4 x G 1/8	443-86

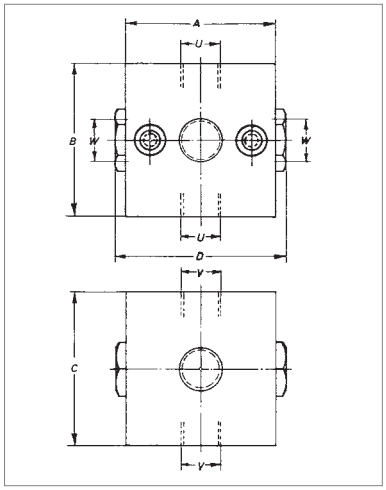

Technical data

Max. operating pressure (p_1)	25 bar
Operating temperature	-10 °C up to +80 °C
Mounting position	any
Direction of flow	any
Nominal width	DN 6
Weight	185 g
Material (housing)	aluminum

Dimensions [mm]

Connection threads	G 1/8*	G 1/4
A	40	40
B	40	40
C	40	40
D	46	40
U	G 1/4	G 1/8

* inlet and outlet reduced (reductions with o-ring added loosely)

Distributors with non-return valve - G 1/8 – G 1/4

Distributors with a non-return valve in modular design are mounted before the airvision fog lubricator. Removal of unlubricated air is possible through four outlets which are plugged upon delivery. Port sizes G 1/8 and G 1/4.

Connection threads	Order No.
G 1/8	447.31*
G 1/4	447.32

* inlet and outlet reduced
(reductions with o-ring added loosely)

Accessories

	Order No.
Flange connection kit with seals	447-1
Reduction with o-ring G 1/4 x G 1/8	443-86

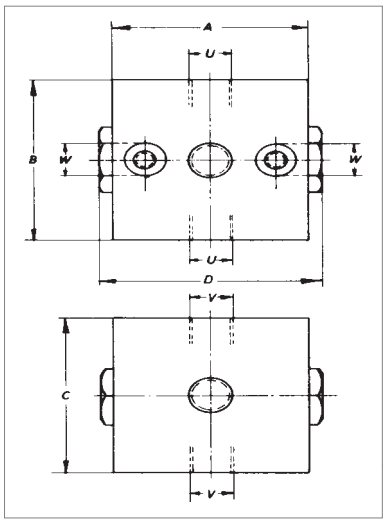

Technical data

Max. operating pressure (p_1)	25 bar
Operating temperature	-10 °C up to +80 °C
Mounting position	any
Direction of flow	arrow
Nominal width	DN 6
Weight	205 g
Material (housing)	aluminum

Dimensions [mm]

Connection threads	G 1/8*	G 1/4
A	40	40
B	40	40
C	40	40
D	46	40
U	G 1/4	G 1/8

* inlet and outlet reduced (reductions with o-ring added loosely)

ООО "ПРОВЕРТ" www.prowert.ru info@prowert.ru +7 (495) 108-05-38

Ball valves with vent - G 1/8 – G 1/4

Ball valves (3/2-way valves) in modular design with relieving for flanging onto airvision maintenance units are especially suitable as a main shut-off valve at inlet. Operation by means of a toggle that turns 90 degrees to switch positions that correspond to the functions: crosswise = closed, relieving open; parallel = open. Toggle available in lockable model. Relieving with sintered muffler. Port sizes G 1/8 and G 1/4.

Toggle not lockable

Connection threads	Order No.
G 1/8	**447.41***
G 1/4	**447.42**

* inlet and outlet reduced
(reductions with o-ring added loosely)

Accessories

	Order No.
Flange connection kit with seals	**447-1**
Reduction with o-ring G 1/4 x G 1/8	**443-86**

Order key for additional options:

447.4x **x**

A – Lockable toggle with padlock

Technical data

Max. operating pressure (p_1)		25 bar
Operating temperature		-10 °C up to +80 °C
Mounting position		any
Direction of flow		arrow
Nominal width	- inside diameter	DN 6
	- exhaust	DN 2
Weight		130 g
Material	- seals	NBR
	- housing	aluminum

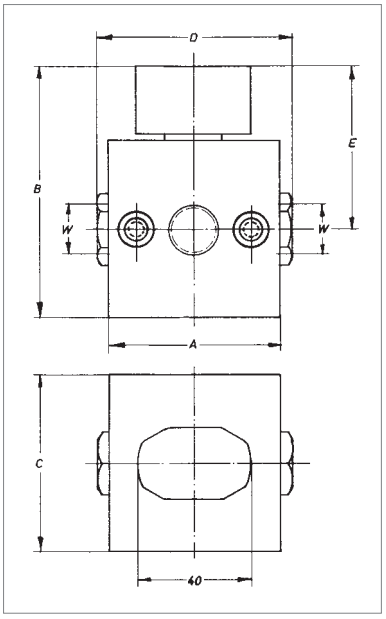

Dimensions [mm]

Connection threads	G 1/8*	G 1/4
A	40	40
B	66	66
C	40	40
D	46	40
E	46	46

* inlet and outlet reduced (reductions with o-ring added loosely)

ООО "ПРОВЕРТ" www.prowert.ru info@prowert.ru +7 (495) 308-05-38

Starting valves - G 1/8 – G 1/4

Starting valves or filling valves in modular design serve to raise the pressure gradually in pneumatic systems when they are being started, for example after emergency shut-off. When switched on, throttles release at first only a small orifice. Only when the pressure has reached about 50% of operating pressure is the full orifice opened. In the opposite direction (relieving) the full orifice is opened by means of a non-return valve. In combination with airvision equipment such as the 3/2-way valve or solenoid valve a complete on-and-off unit can be assembled. Port sizes G 1/8 and G 1/4.
Only suitable for closed systems!

Connection threads	Order No.
G 1/8	**447.51***
G 1/4	**447.52**

* inlet and outlet reduced
(reductions with o-ring added loosely)

Accessories

	Order No.
Flange connection kit with seals	**447-1**
Reduction with o-ring G 1/4 x G 1/8	**443-86**

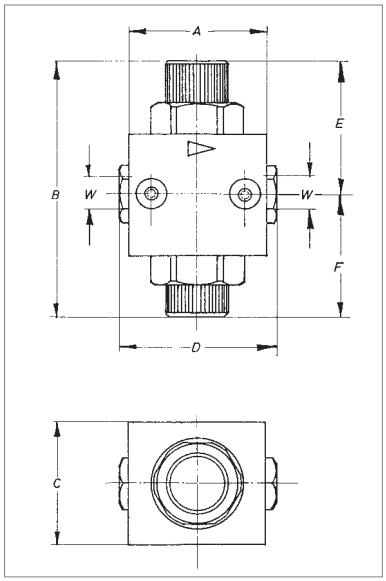

Technical data

Max. operating pressure (p_1)		25 bar
Operating temperature		-10 °C up to +80 °C
Mounting position		any
Direction of flow		arrow
Nominal width		DN 6
Switch over point adjustable		2 to 6 bar
Throttle adjustable		0 to DN 3
Weight		350 g
Material	- seals	NBR
	- housing	aluminum

Dimensions [mm]

Connection threads	G 1/8*	G 1/4
A	44	44
B	90	90
C	40	40
D	50	44
E	44	44
F	46	46

* inlet and outlet reduced (reductions with o-ring added loosely)

ООО "ПРОВЕРТ" www.prowert.ru info@prowert.ru +7 (495) 108-05-38

Solenoid valves - G 1/8 – G 1/4

Solenoid valves (3/2-way valves) in modular design can be used as an alternative to the manually operated ball valve for various voltages as shut-off valves in compressed air systems. The electric connection is made by means of a couplet socket with Pg9. Protective system IP65 according to DIN40050. The valve is closed when currentless. Port sizes G 1/8 and G 1/4.

Standard version:

With exhaust. Connector 220V, 50HZ

Connection threads	Order No.
G 1/8	447.612*
G 1/4	447.622

* inlet and outlet reduced
(reductions with o-ring added loosely

Order key for all variants:

447.6xx

- **1** – 24V, 50Hz
- **2** – 220V, 50Hz
- **3** – 110V, 50Hz
- **4** – 24V=

- **1** – G 1/8
- **2** – G 1/4

connection threads

Accessories

	Order No.
Flange connection kit with seals	447-1
Reduction with o-ring G 1/4 x G 1/8	443-86

Technical data

Nominal rates of flow**		1.200Nl/min
Max. operating pressure (p_1)		10bar
Min. operating pressure (p_1)		3bar
Operating temperature		0°C up to +80°C
Mounting positio		any
Direction of flow		arrow
Solenoid	- voltage available (tolerance ±10%)	24V~ 110V~ 220V~ 24V=
	- rel. swith-on time	100%
	- type of protection and DIN40050	IP65
Weight		400g
Material	- seals	NBR
	- housing	aluminum
Waste electrical and electronic equipment		WEEE-Reg.-No.: DE51604370

** measured at p_1 = 8bar, p_2 = 6bar and Δp = 1bar

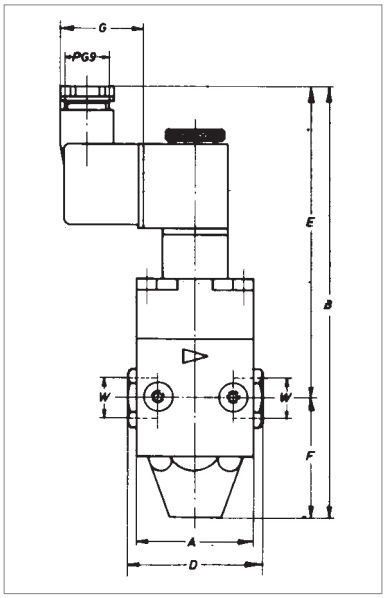

Dimensions [mm]

Connection threads	G 1/8*	G 1/4
A	40	40
B	145	145
C	40	40
D	46	40
E	105	105
F	40	40
G	25	25

* inlet and outlet reduced (reductions with o-ring added loosely)

ООО "ПРОВЕРТ" www.prowert.ru info@prowert.ru +7 (495) 308-05-38

ООО "ПРОВЕРТ" www.prowert.ru info@prowert.ru +7 (495) 108-05-38

Compressed Air Preparation - airvision compact L

Filters	16
Pressure regulators	17
Lubricators	18
Filter pressure regulators	19
Two-piece maintenance units	20
Three-piece maintenance units	21

ООО "ПРОВЕРТ" www.prowert.ru info@prowert.ru +7 (495) 108-05-38

Filters - G 1/8 – G 1/4

Compressed air filter in modular design. Flanging for more devices is possible. Containers made of plastic (polycarbonate) with a manual drain valve for condensate. Two-stage separation (cyclone) and filter insert made of plastic (polyethylene) with a pore size of 40 µm. Port sizes G 1/8 and G 1/4.

With plastic bowl and manually operated drain valve, filter porosity 40 µm

Connection threads	Order No.
G 1/8	460.21*
G 1/4	460.22

* inlet and outlet reduced
(reductions with o-ring added loosely)

Spare parts and accessories

		Order No.
Plastic bowl with seal and manually operated drain valve		443-12
Filter element	filter porosity 40 µm (mounted)	443-32
	filter porosity 5 µm (option)	443 167
Reduction with o-ring G 1/4 x G 1/8		443-86

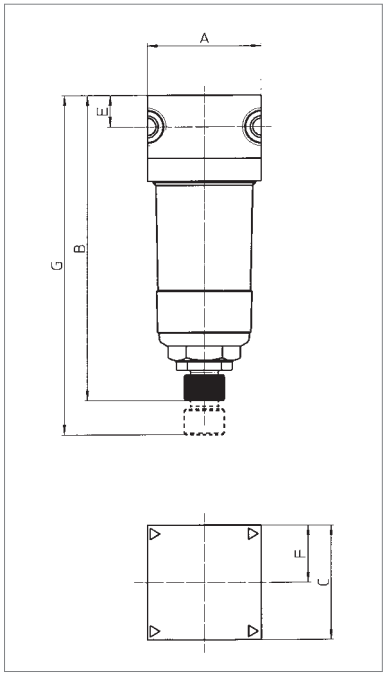

Technical data

Nominal rates of flow**		800 Nl/min
Max. operating pressure (p_1)		16 bar
Operating temperature		0 °C up to +50 °C
Effective bowl volume		12 cm³
Mounting position		vertical
Direction of flow		arrow
Filter porosity		40 µm
Nominal width		DN 6
Weight		200 g
Material	- seals	NBR
	- housing	zinc alloy
	- filter element	polyethylene
	- plastic bowl	polycarbonate

** measured at p_1 = 6 bar and Δp = 1 bar

Dimensions [mm]

Connection threads	G 1/8*	G 1/4
A	46	40
B	106	106
C	40	40
E	11	11
F	20	20
G	150	150

* inlet and outlet reduced
(reductions with o-ring seperately included)

Rates of flow

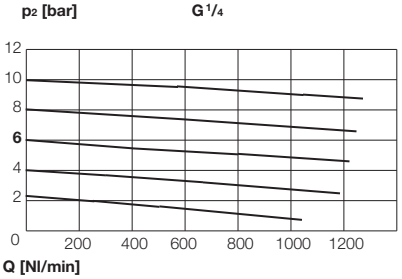

ООО "ПРОВЕРТ" www.prowert.ru info@prowert.ru +7 (495) 108-05-38

Pressure regulators - G 1/8 – G 1/4

Compressed air pressure regulators in modular design maintain constant working pressure regardless of pressure fluctuations in the system or of air consumption. Flanging is possible. Control range 0,5 to 10 bar. Secondary air exhaust (relieving) and almost complete independence of primary pressure. Gauge can be mounted on back or front. Adjustment can be locked by pressing the handwheel. Panel or bracket set possible. **Important:** Use of filter always recommended.

Standard versions:

Control range 0,5 - 10 bar, with gauge

Connection threads	Order No.
G 1/8	**461.213***
G 1/4	**461.223**

* inlet and outlet reduced
(reductions with o-ring added loosely)

Order key for all variants:

461.xxx

- **2** – 0,5 - 6 bar
- **3** – 0,5 - 10 bar
- **4** – 0,5 - 16 bar

control range (p_2)

- **1** – G 1/8
- **2** – G 1/4

connection threads

- **2** – with gauge
- **4** – without gauge

for example:
444.223 *– but* ***without gauge =*** *444.**4**23*

Spare parts and accessories

	Order No.
Bracket-set for mounting on cap (bracket and nut)	**443-36**
Nut for mounting on control panel	**381-32**
Gauge horizontal ø40 (G 1/8), display range 0 - 16 bar	**680**
Valve complete with stem	**443-142**
Diaphragm complete with gliding ring	**480-92**
Reduction with o-ring G 1/4 x G 1/8	**443-86**

Technical data

Nominal rates of flow**		600 Nl/min
Max. operating pressure (p_1)		16 bar
Control range (p_2)		0,5 - 10 bar
Operating temperature		0 °C up to +50 °C
Mounting position		any
Direction of flow		arrow
Nominal width		DN 6
Dependence upon supply pressure		< 10 %
Reversing control hysteresis		~ 0,6 bar
Weight		230 g
Material	- seals	NBR
	- housing	zinc alloy

** measured at p_1 = 8 bar, p_2 = 6 bar and Δp = 1 bar

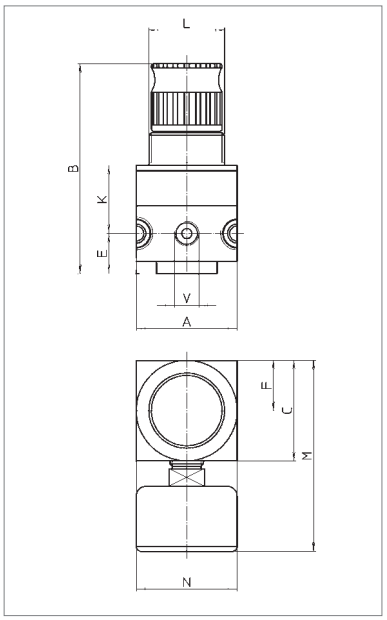

Rates of flow

$p_1 = p_2 + 2$ bar

p_2 [bar] G 1/4

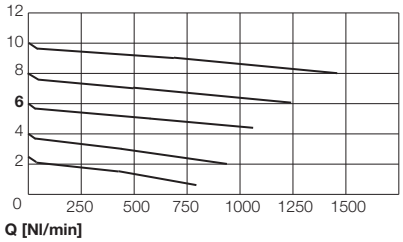

Dimensions [mm]

Connection threads	G 1/8*	G 1/4
A	46	40
B	90	90
C	40	40
E	25	25
F	20	20
K	23	23
L	M30x1,5	M30x1,5
M	75	75
N	ø40	ø40

* inlet and outlet reduced
(reductions with o-ring added loosely)

ООО "ПРОВЕРТ" www.prowert.ru info@prowert.ru +7 (495) 108-05-38

Lubricators - G 1/8 – G 1/4

Compressed air lubricator in modular design add a fine oil fog to the compressed air, pro-viding a constant and reliable lubrication of pneumatically regulated compressed air tools, valves and cylinders etc.. Flanging is possible on both sides for adding other airvision `L´ equipment.Oil can be refilled under pressure. Needle valve for oil adjustment with high drop constancy over long periods of time. Port sizes G 1/8 and G 1/4.

With plastic bowl, without drain valve

Connection threads	Order No.
G 1/8	462.01*
G 1/4	462.02

* inlet and outlet reduced
(reductions with o-ring added loosely)

Spare parts and accessories

	Order No.
Plastic bowl without drain valve, with seal	446-6
Oil regulating valve plastic	423-179
Reduction with o-ring G 1/4 x G 1/8	443-86

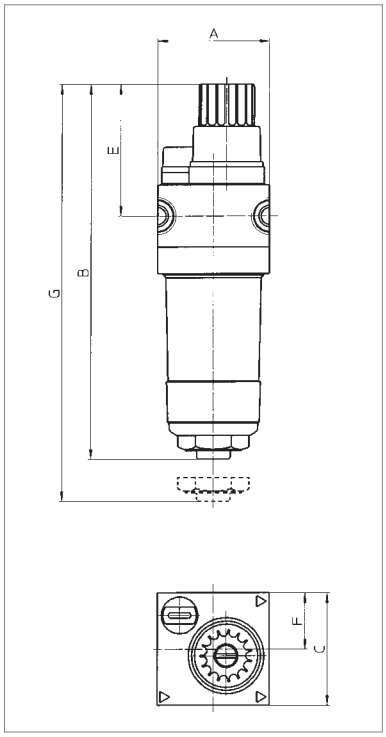

Technical data

Nominal rates of flow**	800 Nl/min
Min. flow rate***	30 Nl/min
Max. operating pressure (p_1)	16 bar
Operating temperature	0 °C up to +50 °C
Mounting position	vertical
Direction of flow	arrow
Effective bowl volume	25 cm³
Nominal width	DN 6
Weight	230 g
Material - seals	NBR
- housing	zinc alloy
- plastic bowl	polycarbonate

** measured at p_1 = 6 bar and Δp = 1 bar
*** oil delivery 10 droplets/min at 6 bar

Dimensions [mm]

Connection threads	G 1/8*	G 1/4
A	46	40
B	138	138
C	40	40
E	50	50
F	20	20
G	170	170

* inlet and outlet reduced
(reductions with o-ring added loosely)

Rates of flow

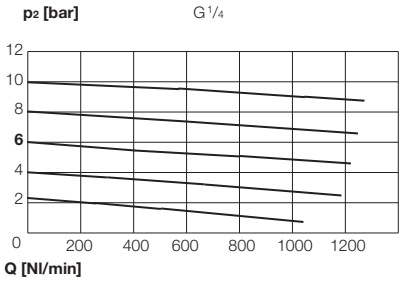

Recommended oil: Oil containers made of plastic (polycarbonate) are attacked by oil additives, anti-frost or synthetic oils. We therefore recommend regular lubricating oils of approx. **22 bis 32 cSt** at 40 °C (in the case of striking tools up to 68 cSt). Metal containers should be used for other oils, especially for low-temperature oils. Also recommended is a metal lubricator adjusting cap.

ewo Compressed air special oil

Oils see chapter 10

Container	Order No.
Volume 1 litre	583
Volume 5 litre	583.1

ООО "ПРОВЕРТ" www.prowert.ru info@prowert.ru +7 (495) 108-05-38

Filter pressure regulators - G 1/8 – G 1/4

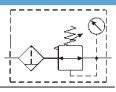

Filters for compressed air and pressure regulators combined in one piece of equipment in modular design to save space. The cleansed compressed air is kept at constant pressure regardless of pressure fluctuations in the system or of air consumption. Secondary air exhaust (relieving) and almost complete independence of primary pressure. Diaphragm regulator with working pressure ranges 0,5 and 10 bar. Adjustment can be locked by pressing the handwheel. Gauge can be mounted on back or front side. Port sizes G 1/8 to G 1/4.

Standard versions:

Control range 0,5 - 10 bar, plastic bowl with manually operated drain valve, gauge

Connection threads	Order No.
G 1/8	463.213*
G 1/4	463.223

* inlet and outlet reduced
(reductions with o-ring added loosely)

Order key for all variants:

463.xxx

- **2** – 0,5 - 6 bar
- **3** – 0,5 - 10 bar
- **4** – 0,5 - 16 bar

control range (p_2)

- **1** – G 1/8
- **2** – G 1/4

connection threads

- **2** – with manually operated drain valve (p_1 max. 16 bar)
- **3** – with internal automatic drain valve (p_1 1 - 12 bar)
- **5** – with semi-automatic drain valve (p_1 0,5 - 16 bar)
- **6** – with external automatic drain valve A (p_1 4 - 16 bar)
- **7** – with external automatic drain valve B (p_1 1 - 12 bar)

Spare parts and accessories

			Order No.
Bracket-set for mounting on cap (bracket and nut)			443-36
Nut for mounting on control panel			381-32
Plastic bowl with seal and	- manually operated drain valve		443-12
	- semi-automtic drain valve		443-42
	- external automatic drain valve A		443-43
	- external automatic drain valve B		443-111
Plastic bowl, long with seal and	- internal automatic drain valve(max.12 bar)		419-78
Filter element	filter porosity 40 µm (mounted)		443-32
	filter porosity 5 µm		443-167
Gauge horizontal, ø40	display range	0 - 10 bar	670
		0 - 16 bar	680
		0 - 25 bar	690
Valve complete with stem			443-142
Diaphragm complete with gliding ring			480-92

Technical data

Nominal rates of flow**		750 Nl/min
Max. operating pressure (p_1)		16 bar
Control range (p_2)		0,5 - 10 bar
Operating temperature		0 °C up to +50 °C
Mounting position		vertical
Direction of flow		arrow
Filter porosity		40 µm
Nominal width		DN 6
Effective bowl volume		12 cm³
Dependence upon supply pressure		< 10 %
Reversing control hysteresis		~ 0,6 bar
Weight		350 g
Material	- seals/housing	NBR / zinc alloy
	- filter element	polyethylene
	- plastic bowl	polycarbonate

**measured at p_1 = 8 bar, p_2 = 6 bar and Δp = 1 bar

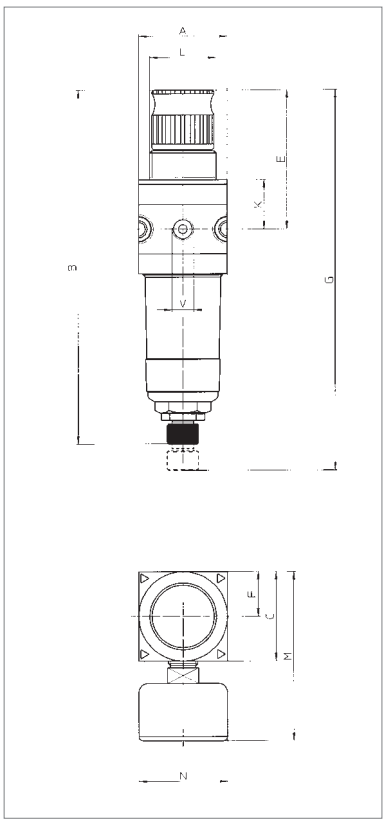

Rates of flow

$p_1 = p_2 + 2$ bar

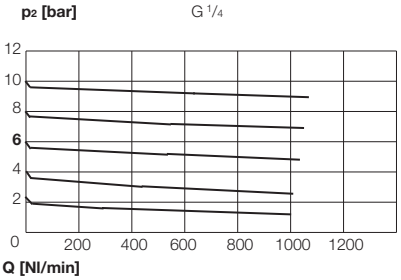

Dimensions [mm]

Connection threads	G 1/8*	G 1/4
A	46	40
B	162	162
C	40	40
E	65	65
F	20	20
G	190	190
K	23	23
L	M30x1,5	M30x1,5
M	75	75
N	ø40	ø40

* inlet and outlet reduced (reductions with o-ring added loosely)

ООО "ПРОВЕРТ" www.prowert.ru info@prowert.ru +7 (495) 108-05-38

Two-piece maintenance units - G 1/8 – G 1/4

A maintenance unit in block assembly consisting of an airvision filter pressure reducer and a fog lubricator. Port sizes G 1/8 and G 1/4.

Control range 0,5 - 10 bar, plastic bowls, with manually operated drain valve, with gauge

Connection threads	Order No.
G 1/8	464.21*
G 1/4	464.22

* inlet and outlet reduced
(reductions with o-ring added loosely)

Spare parts and accessories

	Order No.
Flange connection kit with seal	464-1
Bracket-set for mounting on cap (bracket and nut)	443-36
Reduction with o-ring G 1/4 x G 1/8	443-86

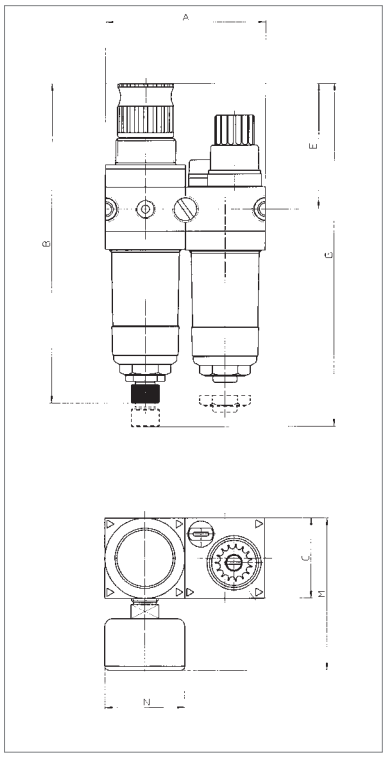

Technical data

Nominal rates of flow**		470 Nl/min
Min. flow rate***		30 Nl/min
Max. operating pressure (p_1)		16 bar
Control range (p_2)		0,5 - 10 bar
Operating temperature		0 °C up to + 50 °C
Mounting position		vertical
Direction of flow		arrow
Nominal width		DN 6
Filter porosity		40 µm
Effective bowl volume	- filter bowl	10 cm³
	- lubricator bowl	25 cm³
Dependence upon supply pressure		< 10 %
Reversing control hysteresis		~ 0,6 bar
Weight		600 g
Material	- seals	NBR
	- housing	zinc alloy
	- filter element	polyethylene
	- plastic bowl	polycarbonate

** measured at p_1 = 8 bar, p_2 = 6 bar and Δp = 1 bar

*** oil delivery 10 droplets/min at 6 bar

Dimensions [mm]

Connection threads	G 1/8*	G 1/4
A	86	80
B	162	162
C	40	40
E	65	65
G	190	190
M	75	75
N	ø40	ø40

* inlet and outlet reduced (reductions with o-ring added loosely)

Rates of flow

$p_1 = p_2 + 2$ bar

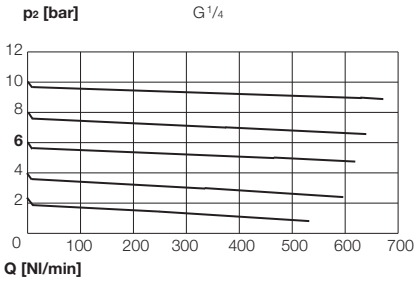

Recommended oil: Oil containers made of plastic (polycarbonate) are attacked by oil additives, anti-frost or synthetic oils. We therefore recommend regular lubricating oils of approx. **22 bis 32 cSt** at 40 °C (in the case of striking tools up to 68 cSt). Metal containers should be used for other oils, especially for low-temperature oils. Also recommended is a metal lubricator adjusting cap.

ewo Compressed air special oil

Oils see chapter 10

Container	Order No.
Volume 1 litre	583
Volume 5 litre	583.1

Lubricators see page 18
Filter pressure regulator see page 19

ООО "ПРОВЕРТ" www.prowert.ru info@prowert.ru +7 (495) 108-05-38

Three-piece maintenance units - G 1/8 – G 1/4

A maintenance unit in block assembly consisting of an airvision filter, pressure regulator and a fog-lubricator. Flanging is possible on either side for additional equipment. Port sizes G 1/8 and G 1/4.

Control range 0,5 - 10 bar, plastic bowls, with manually operated drain valve, with gauge

Connection threads	Order No.
G 1/8	465.21*
G 1/4	465.22

* inlet and outlet reduced
(reductions with o-ring added loosely)

Spare parts and accessories

	Order No.
Flange connection kit with seal	464-1
Bracket-set for mounting on cap (bracket and nut)	443-36
Reduction with o-ring G 1/4 x G 1/8	443-86

Technical data

Nominal rates of flow**		470 Nl/min
Min. flow rate***		30 Nl/min
Max. operating pressure (p_1)		16 bar
Control range (p_2)		0,5 - 10 bar
Operating temperature		0 °C up to + 50 °C
Mounting position		vertical
Direction of flow		arrow
Nominal width		DN 6
Filter porosity		40 µm
Effective bowl volume	- filter bowl	10 cm³
	- lubricator bowl	25 cm³
Dependence upon supply pressure		< 5 %
Reversing control hysteresis		~ 0,1 bar
Weight		700 g
Material	- seals	NBR
	- housing	zinc alloy
	- filter element	polyethylene
	- plastic bowl	polycarbonate

** measured at p_1 = 8 bar, p_2 = 6 bar and Δp = 1 bar *** oil delivery 10 droplets/min at 6 bar

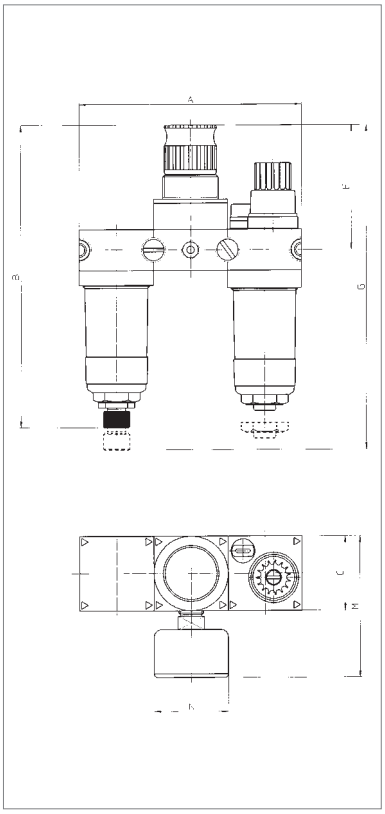

Rates of flow

$p_1 = p_2 + 2$ bar

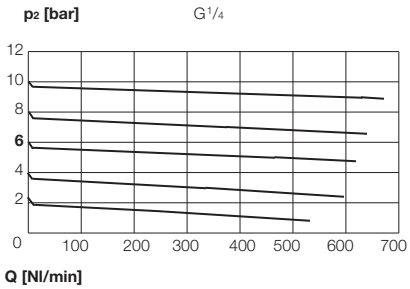

Dimensions [mm]

Connection threads	G 1/8*	G 1/4
A	126	120
B	162	162
C	40	40
E	65	65
G	190	190
M	75	75
N	ø40	ø40

*inlet and outlet reduced (reductions with o-ring added loosely)

Recommended oil: Oil containers made of plastic (polycarbonate) are attacked by oil additives, anti-frost or synthetic oils. We therefore recommend regular lubricating oils of approx. **22 bis 32 cSt** at 40 °C (in the case of striking tools up to 68 cSt). Metal containers should be used for other oils, especially for low-temperature oils. Also recommended is a metal lubricator adjusting cap.

ewo Compressed air special oil

Oils see chapter 10

Container	Order No.
Volume 1 litre	583
Volume 5 litre	583.1

Filter see page 16
Pressure regulator see page 17
Lubricator see page 18

ООО "ПРОВЕРТ" www.prowert.ru info@prowert.ru +7 (495) 108-05-38

ООО "ПРОВЕРТ" www.prowert.ru info@prowert.ru +7 (495) 108-05-38

Compressed Air Preparation - Stainless Steel

Filters	Type 692	**2**
Filter pressure regulators	Type 690	**3**
Pressure regulators	Type 691	**4**
Couplings	Safety coupling DN7,2	**5**
Threaded connections	Threaded fittings	**6 – 9**
Valves	Ball valves	**10**

ООО "ПРОВЕРТ" www.prowert.ru info@prowert.ru +7 (495) 108-05-38

Filters type 692 - G 1/4 – G 1

Compressed air filters serve to remove solid and liquid impurities (condensation water, pipe scaling, rust particles) from the air in the working place. They protect the following components from dirt and abrasion. This filter has been developed specially for high-demanding applications. Filter with bowl without sight glass, completely made of stainless steel, therefore extremely robust. Suitable for compressed air, non-toxic gases and liquids.
Application area: Chemical industry, mineral oil processing, apparatus engineering.

Standard version:

With manual drain valve, filter porosity 50 µm

Size	Order No. Connection thread G 1/4	G 3/8	G 1/2	G 3/4	G 1
I	**692.221**	**692.231**	-	-	-
II	-	-	**692.261**	**692.281**	-
III	-	-	-	-	**692.291**

Order key for all variants:

692.x x x

- 1 50 µm
- 2 25 µm
- 3 5 µm

filter porosity

- 2 G 1/4 size I
- 3 G 3/8 size I
- 6 G 1/2 size II
- 8 G 3/4 size II
- 9 G 1 size III

- 0 without drain valve
- 2 manual drain valve

for example:
692.221= *with manual drain valve, G 1/4 with 50 µm*

Accessories

Mounting bracket	Order No.
Suitable for size I	**690-30**
Suitable for size II	**690-35**
Suitable for size III	**690-39**

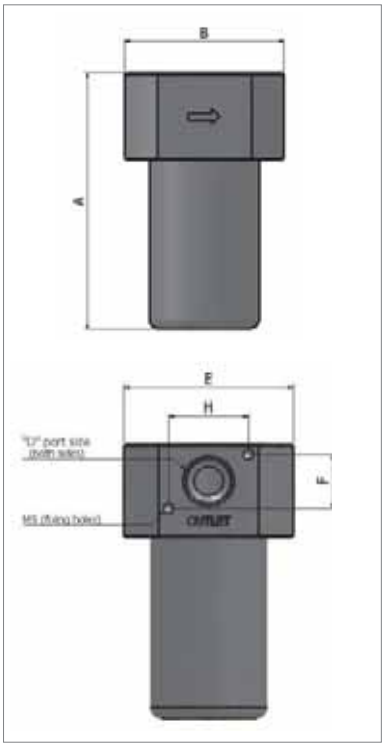

Technical data

		Size I		II		III
Connection thread		**G 1/4**	**G 3/8**	**G 1/2**	**G 3/4**	**G 1**
Nominal rates of flow (Nl/min)*		2100		3600		3600
Media		compressed air, non-toxic gases, liquids				
Filter porosity		5, 25 oder 50 µm				
Max. pre-pressure (p_1)		60 bar				
Temperature ranges	with NBR sealings	-20 °C - +80 °C				
	with EPDM sealings (optionally)	-45 °C - +80 °C				
	with silicone sealings (optionally)	-60 °C - +200 °C				
Drain of condensate		manually operated drain valve				
Bowl capacity		0,11 l				
Materials	- Body	stainless steel No. 1.4404 (AISI 316L)				
	- Bowl	stainless steel No. 1.4404 (AISI 316L)				
	- Inner parts	stainless steel No. 1.4404 (AISI 316L)				
	- Sealings	NBR (for EPDM and silicone please indicate when ordering)				
Weight (kg)		1,6		2,3		3,3

* measured at 10 bar, pre-pressure (p_1) and Δp = 1 bar

Rates of flow [Nl/min]

Size I (G 1/4)

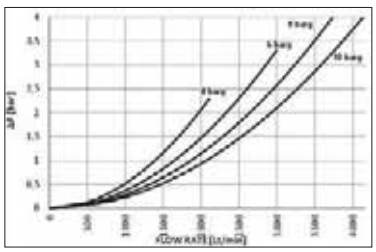

Size II (G 1/2)

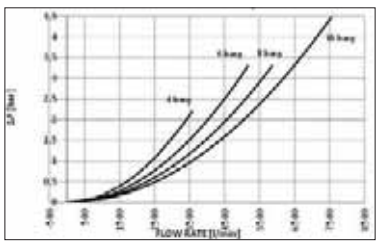

Dimensions [mm]

Size	I	II	III
Connection thread	**G 1/4, G 3/8**	**G 1/2, G 3/4**	**G 3/4, G 1**
A	112	111	145
B	62	68	114
C	97	114	123
D	G 1/4, G 3/8	G 1/2, G 3/4	G 1
E	62	68	88
F	20	22	36
H	28	32	34

Mounting bracket Dimensions [mm]

Suitable for size I

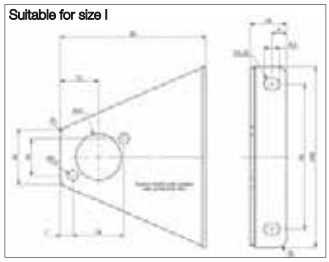

Suitable for size II

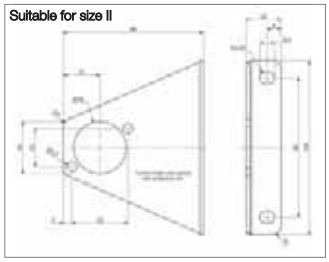

Suitable for size III

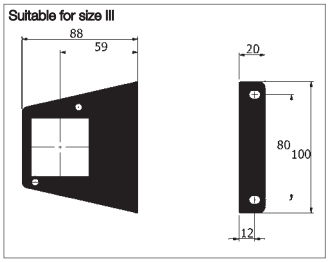

ООО "ПРОВЕРТ" www.prowert.ru info@prowert.ru +7 (495) 108-05-38

Filter pressure regulators type 690 - G 1/4 – G 1

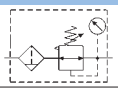

Filter and pressure regulator united in a space-saving model. This filter pressure regulator has been developed specially for high-demanding applications. Filter with bowl without sight glass, completely made of stainless steel, therefore extremely robust. Suitable for compressed air, non-toxic gases and liquids. Operating pressure from 0 to 15 bar.

Application area: Chemical industry, mineral oil processing, apparatus engineering.

Standard version:

With manual drain valve, control range 0,5–8 bar

Size	Order No. Connection thread G 1/4	G 3/8	G 1/2	G 3/4	G 1
I	**690.423**	**690.433**	-	-	-
II	-	-	**690.463**	**690.483**	-
III	-	-	-	-	**690.493**

Order key for all variants:

690.x x x

- **1** 0,2 - 3 bar
- **3** 0,5 - 8 bar
- **4** 1,0 - 15 bar

control range (p_2)

- **2** G 1/4 size I
- **3** G 3/8 size I
- **6** G 1/2 size II
- **8** G 3/4 size II
- **9** G 1 size III

- **2** Manual drain valve on the bowl, with gauge
- **4** Manual drain valve on the bowl, without gauge

for example:
690.231= *with manual drain valve on bowl, G 3/8 with gauge, 0,2-3 bar*

Accessories

Gauge, ø50, G 1/4 female thread	**Scale**	**Order No.**
	0- 2,5 bar	**140**
	0- 6,0 bar	**141**
	0- 10,0 bar	**142**
	0- 16,0 bar	**143**
	0- 25,0 bar	**144**
	0- 40,0 bar	**145**
Mounting bracket, suitable for size I, dimensions see page 2		**690-30**
Mounting bracket, suitable for size II, dimensions see page 2		**690-35**
Mounting bracket, suitable for size III,dimensions see page 2		**690-39**

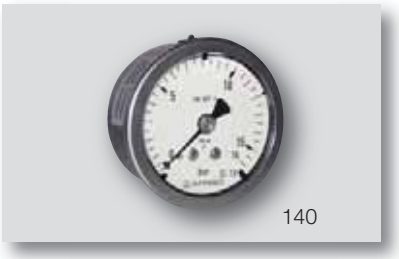

Technical data

	Size I		Size II		Size III
Connection thread (optional NPT)	**G 1/4**	**G 3/8**	**G 1/2**	**G 3/4**	**G1**
Nominal rates of flow (Nl/min)*	4500		5500		5500
Regulating system	Diaphragm				
Adjustment	by screw (hexagon socket screw with locknut)				
Media	compressed air, non-toxic gases, liquids				
Relieving function	reversible (secondary venting) (optionally: non-reversible, without secondary venting, please indicate when ordering)				
Filter porosity	5, 25 or 50 µm				
Max. pre-pressure (p_1)	60 bar				
Temperature ranges with NBR sealings	-20 °C - +80 °C				
with EPDM sealings (optionally)	-45 °C - +80 °C				
with silicone sealings (optionally)	-60 °C - +200 °C				
Bowl capacity	0,11				
Drain of condensate	manually operated drain valve				
Material - Body / bowl / inner parts / filter element	Stainless steel No.1.4404 (AISI 316L)				
- Sealings / diaphragm	NBR (for EPDM and silicone please indicate when ordering)				
Weight (kg)	1,6		2,3		4,2

* measured at 10 bar pre-pressure (p_1), 6,3 bar secondary pressure (p_2) and Δp = 1 bar

Dimensions [mm]

Size	I	II	III
Connection thread	**G 1/4, G 3/8**	**G 1/2, G 3/4**	**G 3/4, G 1**
A	223	242	267
B	62	68	114
C	97	114	123
D	G 1/4, G 3/8	G 1/2, G 3/4	G1
E	62	68	88
F	97	114	123
G	20	22	57
H	28	32	33
I	87	103	96

Rates of flow [Nl/min]

Size I (G 1/4)

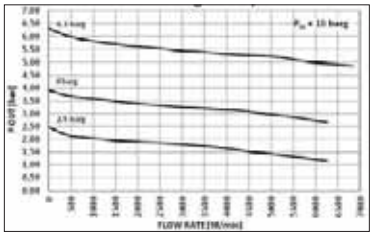

Size II (G 1/2)

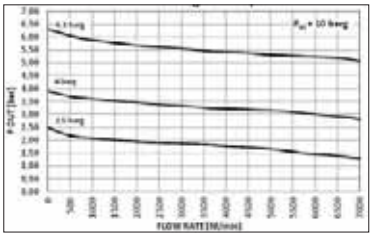

ООО "ПРОВЕРТ" www.prowert.ru info@prowert.ru +7 (495) 108-05-38

Pressure regulator type 691 - G 1/4 – G 1

691.423

The system pressure in a compressed air system varies according to the compressor size. Pressure regulators are reducing this fluctuating line pressure (pressure p_1) to the desired working pressure (outlet pressure p_2) and maintain it largely constant. This pressure regulator has been developed specially for high-demanding applications. Operating pressure from 0 to 15 bar. The pressure gauge can be mountet on both sides Note: To prevent the system from dirt or breakdown, a filter should be installed at first step.

Application area: Chemical industry, mineral oil processing, apparatus engineering.

Standard version:

Without gauge, control range 0,5 – 8 bar

Size	Order No. Connection thread G 1/4	G 3/8	G 1/2	G 3/4	G1
I	**691.423**	**691.433**	-	-	-
II	-	-	**691.463**	**691.483**	-
III	-	-	-	-	**691.493**

Order key for all variants:

691.x x x

- 1st x (control range (p_2)):
  - **0** 0,1 - 1,5 bar
  - **1** 0,2 - 3,0 bar
  - **3** 0,5 - 8,0 bar
  - **4** 1,0 - 15,0 bar
- 2nd x (connection thread):
  - **2** G 1/4 size I
  - **3** G 3/8 size I
  - **6** G 1/2 size II
  - **8** G 3/4 size II
  - **9** G 1 size III
- 3rd x (gauge):
  - **2** with gauge
  - **4** without gauge

for example:
691.231= *G 3/8 with gauge, 0,2-3 bar*

Accessories

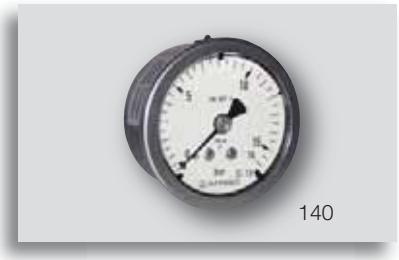
140

	Scale	Order No.
Gauge, ø 50, G 1/4 female	0- 2,5 bar	**140**
	0- 6,0 bar	**141**
	0-10,0 bar	**142**
	0-16,0 bar	**143**
	0-25,0 bar	**144**
	0-40,0 bar	**145**
Mounting bracket, suitable for size I, dimensions see page 2		**690-30**
Mounting bracket, suitable for size II, dimensions see page 2		**690-35**
Mounting bracket, suitable for size III, dimensions see page 2		**690-39**

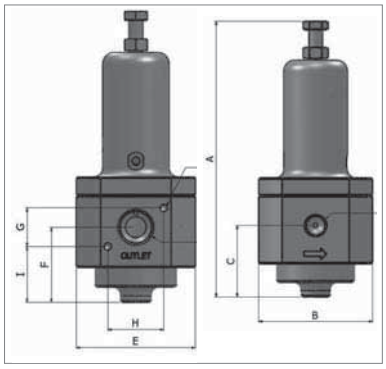

Technical data

	Size I		Size II		Size III
Connection thread (optional NPT)	**G 1/4**	**G 3/8**	**G 1/2**	**G 3/4**	**G 1**
Nominal rates of flow (Nl/min)*	5000		6000		6000
Regulating system	Diaphragm				
Regulating range	0,3-3 / 0,5-8 / 0,5-17,2 bar or 4,4-44 / 7,2-116 / 7,2-250 psi				
Adjustmen	by screw (hexagon socket screw with locknut)				
Media	compressed air, non-toxic gases, liquids				
Relieving function	reversible (secondary venting) (optionally: non-reversible, without secondary venting, please indicate when ordering)				
Filter porosity	5, 25 or 50 µm				
Max. pre-pressure (p_1)	60 bar				
Temperature ranges with NBR sealings	-20 °C - +80 °C				
with EPDM sealings (optionally)	-45 °C - +80 °C				
with silicone sealings (optionally)	-60 °C - +200 °C				
Bowl capacity	0,11				
Drain of condensate	manually operated drain valve				
Materials - Body / bowl / inner parts / filter element	stainless steel No. 1.4404 (AISI 316L)				
- Sealings / diaphragm	NBR (for EPDM and silicone please indicate when ordering)				
Weight (kg)	1,6		2,3		3,5

* measured at 10 bar pre-pressure (p_1) 6,3 bar and Δp = 1 bar

Dimensions [mm]

size	I	II	III
Connection thread	**G 1/4, G 3/8**	**G 1/2, G 3/4**	**G 3/4, G 1**
A	168	171	204
B	62	68	114
C	41	43	59
D	G 1/4, G 3/8	G 1/2, G 3/4	G1
E	62	68	88
F	42	43	59
G	20	22	57
H	28	32	33
I	32	32	32

Rates of flow [Nl/min]

Size I (G 1/4)

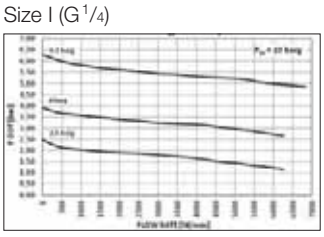

Size II (G 1/2)

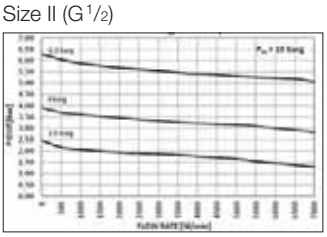

Size III (G 1)

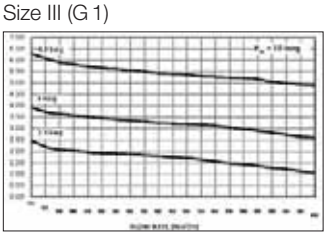

ООО "ПРОВЕРТ" www.prowert.ru info@prowert.ru +7 (495) 108-05-38

DN 7,4 Safety coupling with push-button, swivel connector

This safety coupling (silicone-free) according ISO 4414 with a push-button avoids the so-called whip effect when the plug is decoupled. With the materials used, this high-quality coupling is characterized by stability and compactness. Safety Couplings with rotatable connector (swivel joint) allow for fixed-mounted clutches that the push-button operation can be placed on the ergonomically favorable position. Axis of rotation = 360°.

Handling:

Step 1: By a single actuation of the push button, the coupling is vented, the plug is further secured in the sleeve.

Step 2: When the push button is pressed a second time, the connector is unlocked and can be removed safely.

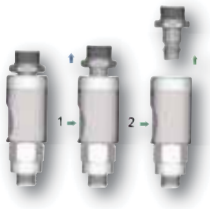

Connection thread W	Dimensions (mm) L	i	SW	Order No.
Coupling				
With male thread				
G 1/4	70,5	6,5	21	**413.201**
G 3/8	70,0	7	21	**413.221**
G 1/2	72,5	8,5	25	**413.241**
With female thread				
G 1/4	71,5	9	21	**413.202**
G 3/8	75,5	10	21	**413.222**
G 1/2	77,5	11	24	**413.242**
With hose connection				
LW 6	88,5	25	21	**413.223**
LW 9	88,5	25	21	**413.224**
LW 13	88,5	25	21	**413.225**

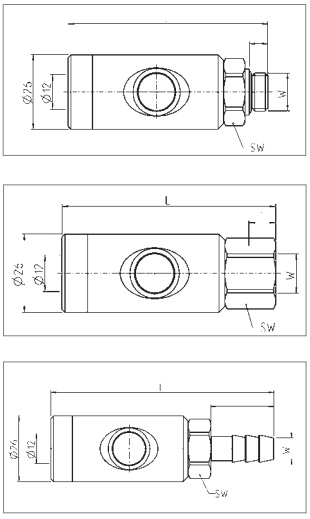

Connection thread W	Dimensions (mm) L	SW	Order No.
Plug			
With male thread			
G 1/4	33	17	**413-053**
G 3/8	33	19	**413-054**
With female thread			
G 1/4	33	17	**413-055**
G 3/8	33	19	**413-056**

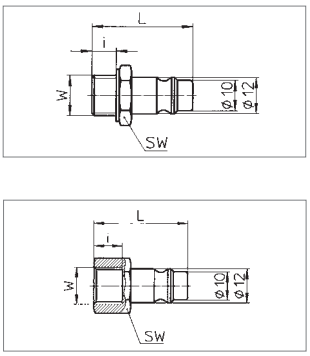

Technical data

Nominal rates of flow*		1.800 Nl/min (measured at 6 bar pre-pressure (p_1) and Δp = 1 bar
Max. operating pressure (p_1)		10 bar
Fluid and operating temperature		-20 °C up to +150 °C
Mounting position		any (coupling preferably before plug in the direction of flow)
Direction of flow		any
Material	- Housing inlet	stainless steel 1.4404
	- Button and valve	stainless steel
	- internal parts	stainless steel
	- Thread	stainless steel
	- Sealing material	FKM

Remark

All DN 7,4 plugs are compatible with all DN 7,4, DN 7,2 and DN 7,8 couplings.

ООО "ПРОВЕРТ" www.prowert.ru info@prowert.ru +7 (495) 108-05-38

Threaded fittings

Material: Stainless steel 316L, material no. 1.4571
Internal thread: Cylindrical according to DIN ISO 228
External thread: Conical according to ISO 7-1

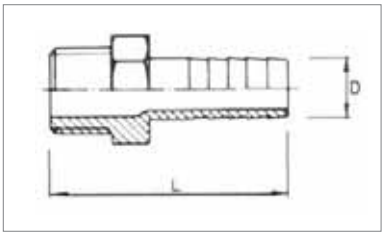

Hose spout with thread

Connection thread	Dimensions [mm] NW	D	L	Order No.
1/8	6	6,0	36,7	**650.00**
1/4	8	6,0	42,6	**650.01**
1/4	8	9,0	41,3	**654.53**
3/8	10	9,0	43,0	**650.02**
3/8	10	11,0	42,7	**654.55**
3/8	10	13,0	46,5	**654.57**
1/2	15	11,0	47,6	**650.03**
1/2	15	12,9	51,5	**654.59**
1/2	15	14,0	54,6	**654.60**
3/4	20	20,0	59,5	**650.04**
1	25	19,0	69,3	**650.05**
1	25	25,4	64,0	**654.62**
1 1/4	32	32,0	66,3	**650.06**
1 1/2	40	38,0	78,0	**650.07**
2	50	51,0	87,0	**650.08**

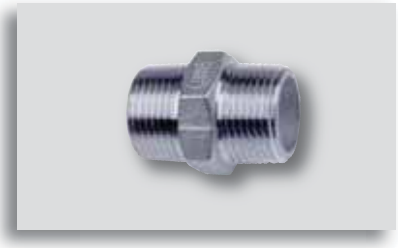

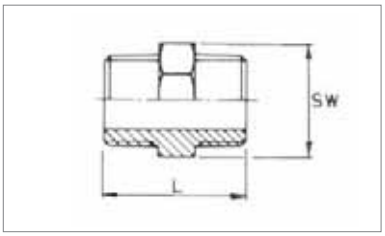

Double nipple with hexagon nut (male)

Connection thread	Dimensions [mm] NW	L	SW	Order No.
1/8	6	29	12	**650.09**
1/4	8	32	17	**650.10**
3/8	10	36	12	**650.11**
1/2	15	42	26	**650.12**
3/4	20	46	32	**650.13**
1	25	52	38	**650.14**
1 1/4	32	56	46	**650.15**

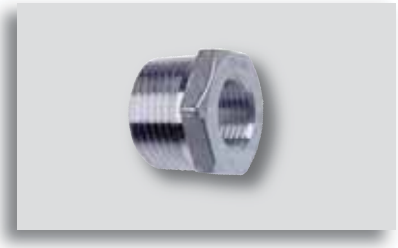

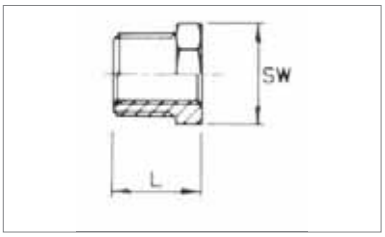

Reducer with hexagon nut (male)

Connection thread	Dimensions [mm] NW	L	SW	Order No.
1/4x1/8	8x 6	15	16	**650.36**
3/8x1/8	10x 6	17	18	**650.37**
3/8x1/4	10x 8	17	18	**650.38**
1/2x1/8	15x 6	21	26	**650.39**
1/2x1/4	15x 8	21	26	**650.40**
1/2x3/8	15x10	21	26	**650.41**
3/4x1/4	20x 8	24	30	**650.42**
3/4x3/8	20x10	24	30	**650.43**
3/4x1/2	20x15	24	30	**650.44**
1x1/4	25x 8	27	35	**650.45**
1x3/8	25x10	27	35	**650.46**
1x1/2	25x15	27	35	**650.47**
1x3/4	25x20	27	35	**650.48**
1 1/4x3/8	32x10	30	45	**650.49**
1 1/4x1/2	32x15	30	45	**650.50**
1 1/4x3/4	32x20	30	45	**650.51**
1 1/4x1	32x25	30	45	**650.52**
1 1/2x1/2	40x15	38	52	**650.53**
1 1/2x3/4	40x20	38	52	**650.54**
1 1/2x1	40x25	38	52	**650.55**
1 1/2x1 1/4	40x32	38	52	**650.56**
2x1/2	50x25	36	63	**650.59**
2x3/4	50x15	36	63	**650.57**
2x1	50x20	36	63	**650.58**
2x1 1/4	50x32	36	63	**650.60**
2x1 1/2	50x40	36	63	**650.61**

ООО "ПРОВЕРТ" www.prowert.ru info@prowert.ru +7 (495) 108-05-38

Threaded fittings

Material: Stainless steel 316L, material no. 1.4571
Internal thread: Cylindrical according to DIN ISO 228
External thread: Conical according to ISO 7-1

Reducing nipple with hexagon nut (male)

Connection thread	Dimensions [mm] NW	L	SW	Order No.
1/4x1/8	8x 6	34	18	650.20
3/8x1/8	10x 6	36	21	650.21
3/8x1/4	10x 8	34	21	650.22
1/2x1/8	15x 6	34	25	650.23
1/2x1/4	15x 8	34	25	650.24
1/2x3/8	15x10	41	25	650.25
3/4x1/4	20x 8	37	31	650.26
3/4x3/8	20x10	38	31	650.27
3/4x1/2	20x15	45	31	650.28
1x1/4	25x 8	39	35	650.29
1x3/8	25x10	44	35	650.30
1x1/2	25x15	44	35	650.31
1x3/4	25x20	50	35	650.32
1 1/4x1/2	32x15	48	46	650.33
1 1/4x3/4	32x20	52	46	650.34
1 1/4x1	32x25	54	46	650.35
1 1/2x1/2	40x15	49	50	654.10
1 1/2x3/4	40x20	53	50	654.11
1 1/2x1	40x25	53	50	654.12
1 1/2x1 1/4	40x32	59	50	654.13
2x1/2	50x15	57	63	654.14
2x3/4	50x20	57	63	654.15
2x1	50x25	57	63	654.16
2x1 1/4	50x32	57	63	654.17
2x1 1/2	50x40	64	63	654.18

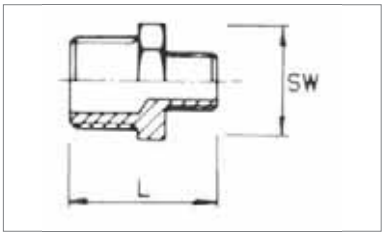

Hexagon cap with female thread and hexagon (male)

Connection thread	Dimensions [mm] NW	L	SW	Order No.
1/8	6	13	15	650.69
1/4	8	17	18	650.70
3/8	10	19	21	650.71
1/2	15	20	27	650.72
3/4	20	24	30	650.73
1	25	25	38	650.74

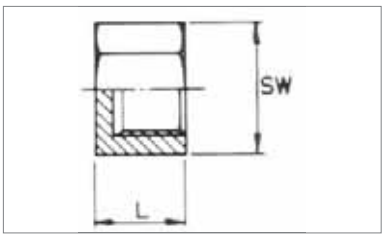

Hexagon plug

Connection thread	Dimensions [mm] NW	L	SW	Order No.
1/8	6	21	12	650.80
1/4	8	21	16	650.81
3/8	10	22	20	650.82
1/2	15	28	24	650.83
3/4	20	30	30	650.84
1	25	32	38	650.85

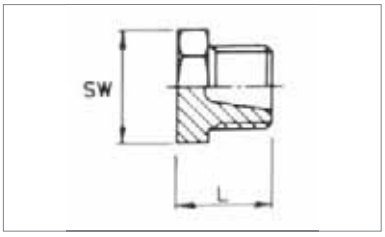

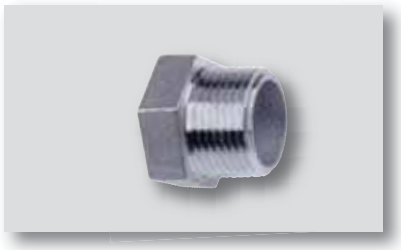

Hexagon nut

Connection thread	Dimensions [mm] NW	L	SW	Order No.
1/8	6	6	23	651.11
1/4	8	8	23	651.12
3/8	10	7	27	651.13
1/2	15	8	32	651.14
3/4	20	10	35	651.15
1	25	10	46	651.16
1 1/4	32	11	55	651.17

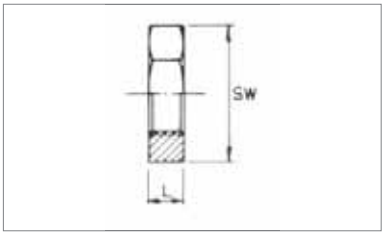

ООО "ПРОВЕРТ" www.prowert.ru info@prowert.ru +7 (495) 108-05-38

Threaded fittings

Material: Stainless steel 316L, material no. 1.4571
Internal thread: Cylindrical according to DIN ISO 228
External thread: Conical according to ISO 7-1

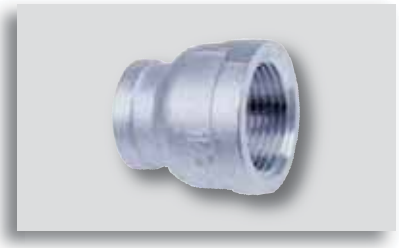

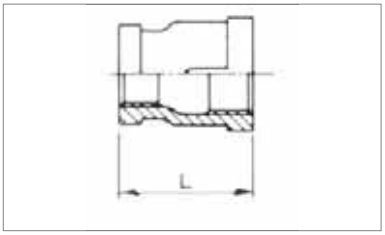

Reducing socket with female thread

Connection thread	Dimensions [mm] NW	L	SW	Order No.
1/4 x 1/8	8 x 6	26	-	651.22
3/8 x 1/8	10 x 6	30	-	651.23
3/8 x 1/4	10 x 8	30	-	651.24
1/2 x 1/8	15 x 6	34	-	651.25
1/2 x 1/4	15 x 8	34	-	651.26
1/2 x 3/8	15 x 10	34	-	651.27
3/4 x 1/4	20 x 8	37	-	651.28
3/4 x 3/8	20 x 10	37	-	651.29
3/4 x 1/2	20 x 15	37	-	651.30
1 x 1/4	25 x 8	43	-	651.31
1 x 3/8	25 x 10	43	-	651.32
1 x 1/2	25 x 15	43	-	651.33
1 x 3/4	25 x 20	43	-	651.34
1 1/4 x 1/2	32 x 15	48	-	651.35
1 1/4 x 3/4	32 x 20	48	-	651.36
1 1/4 x 1	32 x 25	53	-	651.37
1 1/2 x 1/2	40 x 15	53	-	651.38
1 1/2 x 3/4	40 x 20	53	-	651.39
1 1/2 x 1	40 x 25	53	-	651.40
1 1/2 x 1 1/4	40 x 32	53	-	651.41

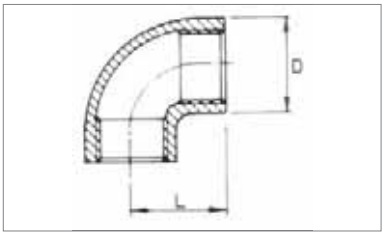

Elbow 90° with female thread

Connection thread	Dimensions [mm] NW	L	SW	Order No.
1/8	6	8	15	651.55
1/4	8	14	18	651.56
3/8	10	20	22	651.57
1/2	15	26	27	651.58
3/4	20	32	35	651.59
1	25	38	42	651.60

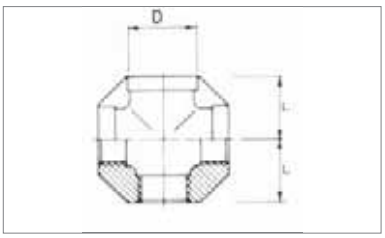

Cross with female thread

Connection thread	Dimensions [mm] NW	L	SW	Order No.
1/4	8	38	18	651.66
3/8	10	46	21	651.67
1/2	15	54	27	651.68
3/4	20	64	33	651.69
1	25	76	42	651.70

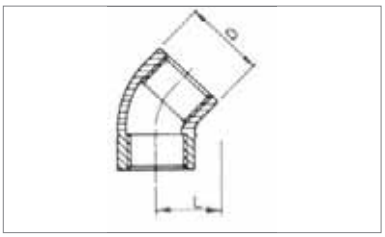

Elbow 45° with female thread

Connection thread	Dimensions [mm] NW	L	SW	Order No.
1/8	6	23	13	651.76
1/4	8	32	21	651.77
3/8	10	39	22	651.78
1/2	15	45	28	651.79
3/4	20	46	34	651.80
1	25	57	41	651.81

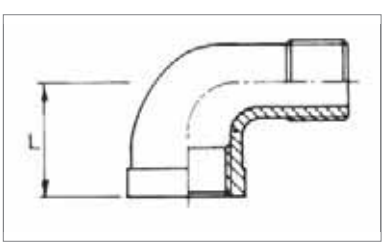

Street elbow with female/male thread

Connection thread	Dimensions [mm] NW	L	SW	Order No.
1/8	6	18	-	651.87
1/4	8	27	-	651.88
3/8	10	27	-	651.89
1/2	15	28	-	651.90
3/4	20	33	-	651.91
1	25	37	-	651.92

ООО "ПРОВЕРТ" www.prowert.ru info@prowert.ru +7 (495) 108-05-38

Threaded fittings

Material: Stainless steel 316L, material no. 1.4571
Internal thread: Cylindrical according to DIN ISO 228
External thread: Conical according to ISO 7-1

Equal tee

Connection thread	Dimensions [mm] NW	L	D	Order No.
1/8	6	14	14	**651.98**
1/4	8	19	19	**651.99**
3/8	10	22	22	**652.00**
1/2	15	28	28	**652.01**
3/4	20	35	35	**652.02**
1	25	42	42	**652.03**

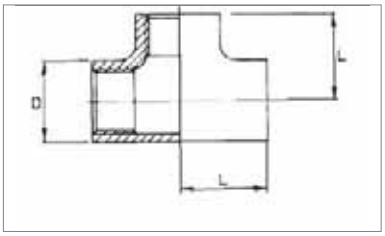

Welding nipples

Connection thread	Dimensions [mm] NW	L	D	Order No.
1/8	6	30	10	**652.18**
1/4	8	30	13	**652.19**
3/8	10	30	17	**652.20**
1/2	15	35	21	**652.21**
3/4	20	40	27	**652.22**
1	25	40	34	**652.23**
1 1/4	32	50	42	**652.24**
1 1/2	40	50	48	**652.25**
2	50	50	60	**652.26**

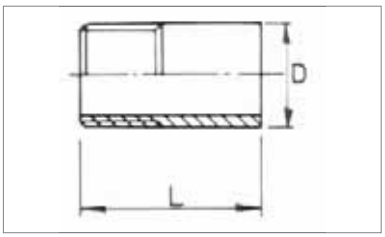

Barrel nipples

Connection thread	Dimensions [mm] NW	L	D	Order No.
1/8	6	40	10	**652.40**
1/4	8	40	13	**652.41**
3/8	10	40	17	**652.42**
1/2	15	60	21	**652.43**
3/4	20	60	27	**652.44**
1	25	60	34	**652.45**
1 1/4	32	80	42	**652.46**
1 1/2	40	80	48	**652.47**
2	50	100	60	**652.48**

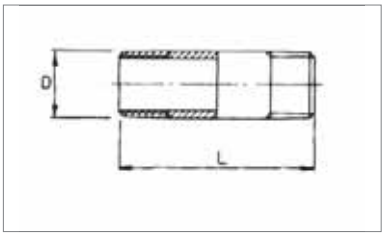

Sockets

Connection thread	Dimensions [mm] NW	L	D	Order No.
1/8	6	17	14	**652.62**
1/4	8	25	17	**652.63**
3/8	10	26	21	**652.64**
1/2	15	34	26	**652.65**
3/4	20	36	32	**652.66**
1	25	43	39	**652.67**
1 1/4	32	48	48	**652.68**
1 1/2	40	48	54	**652.69**
2	50	56	66	**652.70**

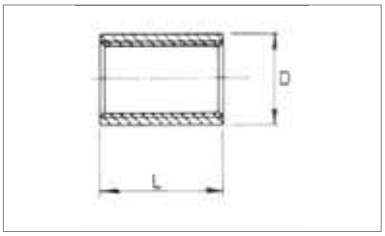

More threaded fittings made of brass see chapter 10, page 20 seq.

ООО "ПРОВЕРТ" www.prowert.ru info@prowert.ru +7 (495) 108-05-38

Ball valves

Stainless steel ball valves are used in applications where aggressive liquid or gaseous media needs in a pipe or hose system, the line can be shut off. High general resistance to water and slightly polluted wastewater, food and organic acids.

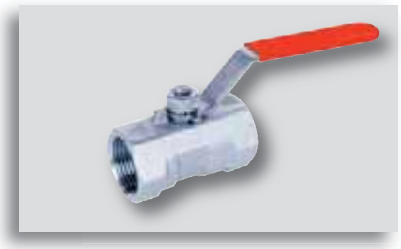

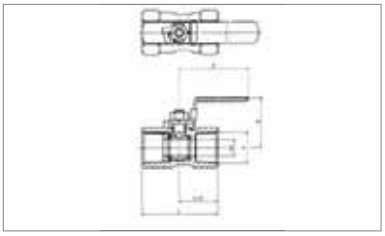

Ball valve, one-piece

Reduced bore.

Max. operating pressure (p_1):

G 1/4 - G 1 1/4 70 bar*
G 1 1/2 - G 2 50 bar*
* Pressure declarations are valid if liquid / gas temperature corresponds to room temperature

Anschluss F	Dimensions [mm] C	D	E	A	Gewicht [kg]	Order No.
G 1/4	39	35	66	5	0,070	**660.14**
G 3/8	44	36	74	7	0,102	**660.15**
G 1/2	57	41	89	9	0,166	**660.16**
G 3/4	59	44	89	13	0,247	**660.17**
G 1	71	51	105	16	0,412	**660.18**
G 1 1/4	78	56	105	20	0,627	**660.19**
G 1 1/2	83	64	130	24	0,838	**660.20**
G 2	100	71	130	32	1,384	**660.21**

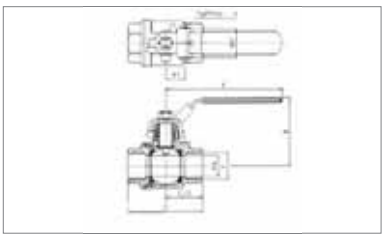

Ball valve, two-piece

Full bore.

Max. operating pressure (p_1):

G 1/4 - G 1 95 bar*
G 1 1/4 - G 2 70 bar*
* Pressure declarations are valid if liquid / gas temperature corresponds to room temperature

Anschluss F	Dimensions [mm] C	D	E	A	Gewicht [kg]	Order No.
G 1/4	49	51	95	12	0,250	**660.22**
G 3/8	49	51	95	13	0,260	**660.23**
G 1/2	57	53	95	15	0,450	**660.24**
G 3/4	65	59	110	20	0,580	**660.25**
G 1	78	73	135	25	1,000	**660.26**
G 1 1/4	91	78	135	32	1,450	**660.27**
G 1 1/2	105	91	165	38	2,150	**660.28**
G 2	127	99	165	51	3,000	**660.29**

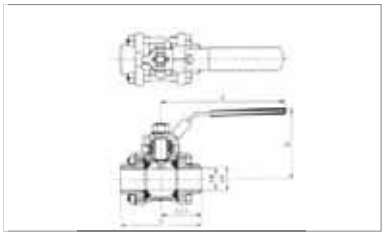

Ball valve, three-piece

Full bore.

Max. operating pressure (p_1):

G 1/4 - G 1 95 bar*
* Pressure declarations are valid if liquid / gas temperature corresponds to room temperature

Anschluss F	Dimensions [mm] C	D	E	A	Gewicht [kg]	Order No.
1/4	59	51	95	12	0,326	**660.43**
3/8	59	51	95	13	0,306	**660.44**
1/2	64	55	95	15	0,450	**660.45**
3/4	75	59	110	20	0,646	**660.46**
1	86	73	135	25	0,948	**660.47**
1 1/4	100	80	140	32	1,530	**660.48**

Technical data

Connection thread:		thread acc. to DIN 259/2999
Media:		compressed air, fluids (please note material resistance)
Operating temperature:		-20 °C bis +160 °C (pressure dependent)
Mounting position:		any
Direction of flow:		any
Material:	- ball valve	stainless steel No. 1.4408
	- ball seat	PTFE 15%
	- seals	PTFE
	- lever protection	PVC

More ball valves see chapter 11, page 8 seq.

ООО "ПРОВЕРТ" www.prowert.ru info@prowert.ru +7 (495) 108-05-38

Compressed Air Preparation - Drain Valves

Manual drain valves		**2**
Semi-automatic drain valves		**2**
Automatic drain valves	Internal automatic drain valves	**3**
	External automatic drain valves	**3**
	Timer controlled external automatic drain valves	**4**
	Electronic external automatic drain valves	**4**
	External automatic drain valves – 20 bar	**5**

ООО "ПРОВЕРТ" www.prowert.ru info@prowert.ru +7 (495) 108-05-38

423-207

275-41

423-110

Manual drain valves

Manually operated drain valves are integrated as standard equipment in all filter bowls or filter-pressure-regulator bowls. On plastic bowls or metal bowls with sight glass a plastic drain screw is used. A metal drain screw is used on metal bowls without sight glass, but if desired it can be optionally screwed into any other bowl with female port thread in place of the plastic drain screw.

Versions	Suitable for	Connection	Order No.
Drain plug (plastic) with bowl insert	Plastic- and metal bowl with sight glass	ø 14	**423-207**
Valve insert (metal) without bowl insert	Metal bowl without sight glass	G 1/8	**275-41**

Spare parts		Order No.
Drain plug (plastic)	G 1/8	**423-110**

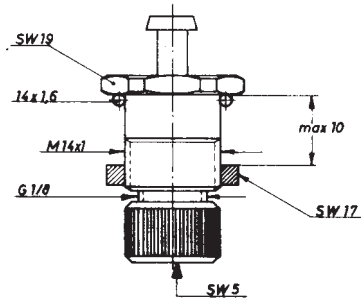

Technical data

Max. operating pressure (p_1)	25 bar
Operating temperature	0 °C up to +90 °C
Mounting position	at lowest point of bowl
Nominal size for condensate	DN 3
Manual operation through meaningful rotation:	clockwise - closed / counter clockwise - opened
Tightening the nut	max. 1,3 Nm

Remark:

To change the drainscrew (423-110) unscrew and pull firmly downwards.

495-100

Semi-automatic drain valve

Semi-automatic drain valves are open when there is no pressure (up to approx. 0,5 bar). At higher pressures they are opened manually. They are thus used in all situations where at least during the night the compressed air system is shut off and relieved. The manual operation is carried by pushing up the shell. A drainage tube for condensate can be installed if necessary.

Suitable for	Connection	Order No.
Plastic and metal bowls	ø 14	**495-100**

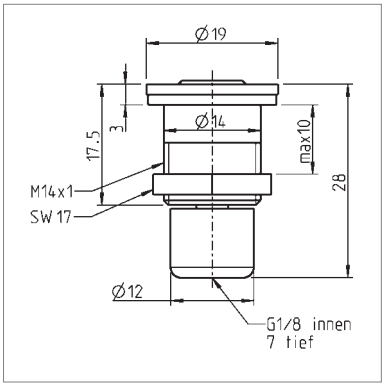

Technical data

Max. operating pressure (p_1)	25 bar
Operating temperature	0 °C up to +90 °C
Closing pressure (valve open at lower pressure)	~ 0,5 bar
Closing pressure flow (air) (= airflow required for reaching closing pressure)	6 m³/h (100 l/min)
Mounting position	at lowest point of bowl
Nominal size for condensate	DN 3,5
Condensate drain	G 1/8 internal thread
Manual operation	push shell (knurled) upwards (above 10 bar more force necessary)
Drain hose	flexible
Tightening the nut	max. 1,3 Nm

ООО "ПРОВЕРТ" www.prowert.ru info@prowert.ru +7 (495) 108-05-38

Internal automatic drain valve

Fully automatic built-in drain valves (ø24 mm) are suitable for installation in all plastic bowls with ø14 mm hole and an WZ19 adaptor. The operating pressure range of the valves runs from approx. 1,5 to 12 bar. At pressures below 1,5 bar the valve is open. Between 1,5 and 12 bar when a certain condensation level is reached, a float activates a pneumatic servo valve and the drain valve is opened. Emergency manual operation is effected by pushing up the red ring.

Connection	Order No.
ø14	**441.1**

Accessories	Order No.
Quiet disk for airvision bowls size I	**419-80**
Quiet disk for airvision and variobloc bowls size II	**419-81**

Technical data

Max. operating pressure (p_1)	12 bar
Critical range	10 to 12 bar
Operating temperature	0 °C up to +50 °C
Min. operating pressure (opened at lower pressure)	~ 1 bar
Closing pressure flow (air) (= airflow required for reaching closing pressure)	7,5 m³/h (125 l/min)
Mounting position	vertically facing downwards
Nominal size for condensate	DN 4
Manual emergency operation	push red disk upwards
Darin hose	5 mm flexible
Tightening the nut	max. 1,3 Nm

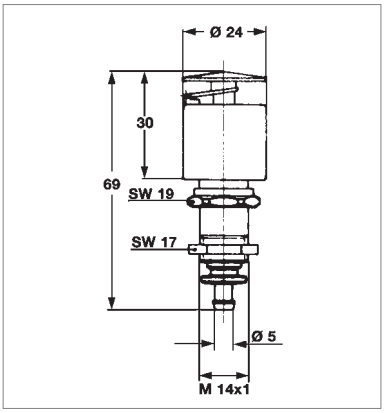

Remark:

Mounting on pressure tanks or water pockets without significant pressure variation not recommended because proper function cannot always be guaranteed (water doesn't flow into the valve).

External automatic drain valve

Fully automatic drain valves can be fitted on all filters or filter pressure regulators in the ewo-programme instead of manually operated or semi-automatic ones. On bowls with G 1/8 female thread the installation is possible at any time. The working pressure range runs from about 4 bar to 16 bar. At pressures below 4 bar the valve is closed and the automatic function turned off. Between 4 and 16 bar when a certain condensation level is reached, a float activates a pneumatic servo valve and the drain valve is opened. After brief draining the valve closes again. Emergency manual operation is carried out by pressing in a horizontally protruding pin.

Model	Versions	Connection	Order No.
External automatic drain valve A	housing and hood brass	G 1/8	**5370.3**
	housing PA, hood brass	G 1/8	**5370.4**
External automatic drain valve B	float gauge in sight	G 1/8	**441.11**

Remark:

Mounting on pressure tanks or water pockets without significant pressure variation not recommended because proper function cannot always be guaranteed (water doesn't flow into the valve).

Technical data

	Drain valve A	Drain valve B
Max. operating pressure (p_1)	16 bar	12 bar
Operating temperature	0 °C up to +90 °C	0 °C up to +50 °C
Min. operating pressure	~ 4 bar	~ 1 bar
at lower pressure	closed	open
Mounting position	vertically facing downwards	vertically facing downwards
Nominal size for condensate	DN 4	DN 4
Manual emergency operation	press pin in (above 6 bar harder to press)	push red disk upwards
Condensate drain	G 1/4 - female thread	5 mm flexible

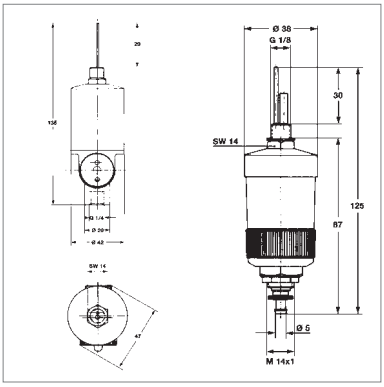

ООО "ПРОВЕРТ" www.prowert.ru info@prowert.ru +7 (495) 108-05-38

External timer controlled drain valve

Timer controlled external-automatic drain valve (solenoid). The condensate drain adjusted frequency controlled or individually timed. No moving parts. Reliable operating without clogging and unsensible to outside conditions. Test button, warning LED light for condense disposal phase.

Connection	Order No.
230 V AC	**5370.100**

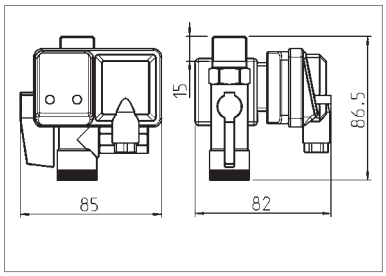

Technical data

Min./max. operating pressure (p_1)	0 - 16 bar
Min./max. operating temperature	1,5 °C up to 65 °C
Input connection	G 1/2
Output connection	G 1/4
Output pipe diameter	6 - 8 mm
Capacity at 10 bar	0,2 - 114 l/h
Opening time	0,5 - 6 sek.
Interval time	0,5 - 30 min.
Electrical connection	
voltage AC	230 V +/-10 %
frequency	50 - 60 Hz
power	18 W
protection	IP 54
cable	3 x 0,75 mm²
Weight	560 g

External electronic drain valve

Electronic drain valve of the new generation is used for the automatic discharge of accumulated condensate from compressed air systems. The basic principle is contactless measurement of accumulated condensate which is the discharged without the loss of valuable compressed air.
Condensate flow constantly flushes debris out of the valve. Thats why uninterrupted operating is guaranteed. Incorrect plunger position is first sign of debris blocking the valve. By detecting incorrect position, blocked plunger release procedure is started. This procedure assures safety and reliable plunger operating. No staff intervention is needed. This procedure starts automatically.
The housing is made of aluminum with plastic cover, which protects electronics inside the device from outside harmful conditions.
Robust aluminum housing eloxated, integrated filter mesh, compact design, two-way connections, contactless measuring, direct acting self cleaning valve (patented), blocked plunger release procedure, operating diagnostic monitoring, test button, warning LED light for drain operating and alarm.

Connection	Order No.
230 V AC	**5370.200**

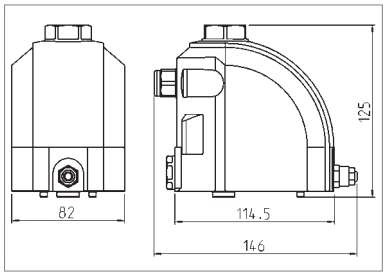

Technical data

Min./max. operating pressure (p_1)		0 - 16 bar
Min./max. operating temperature		1,5 °C up to 65 °C
Inlet connection		G 1/2i (top)
Alternative: inlet connection		G 1/2 (backside down and vent up)
Outlet connection		G 1/8
Drain capacity at 7 bar		15 l/h
Volume		0,15 l
Electrical connection	- voltage AC	230 V +/-10 %
	- frequency	50 - 60 Hz
	- power	24 VA
	- protection	IP 54
	- cable	3 x 0,75 mm²
Material	- housing	aluminum anodized
	- cover	plastic
Weight	900 g	

ООО "ПРОВЕРТ" www.prowert.ru info@prowert.ru +7 (495) 108-05-38

External automatic drain valve – 20 bar

The external automatic drain valve is used larger amounts of condensate (up to 300 l/h) must be automatically discharged from filters, pressure vessels and cyclone seperators. It ensures reliable operating up to 20 bar. When the condensate exceeds the discharge level, the float rises, opens the discharge aperture and discharges condensate from the system. No power supply required.
A manual drain plug is available.
To optimize performance, we recommend the installation of the inlet nipple, especially when they are incurred higher flowrates!

Version	Order No.
Up to 20 bar operating pressure	5370.300

Accessories

	Order No.
Inlet nipple	5370-301

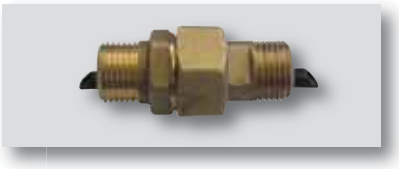

Technical data

Min./max. operating pressure (p_1)		0 - 20 bar
Min./max. operating temperature		1,5 °C up to 65 °C
Input connection		G 1/2
Output connection		G 1/2
Capacity		to 300 l/h
Material	- housing	aluminum alloy
	- o-ring	resistant to conventional compressor oils
Weight		680 g

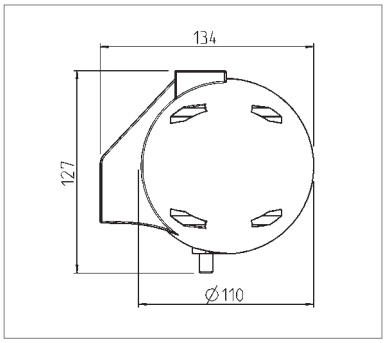

Adapter kit for external drain valves

For installation into the ewo condensate bowl.
This G 1/2 connection is needed for mounting the external drain valve to the ewo condensate bowls (except all metal bowls of our standard line.

Suitable for		Order No.
Drain valve with G 1/2 female		**5370-400**
Drain valve with G 1/2 male	Sleeve 185.113 is necessary.	**5370-400**
	Don´t forget to order!	**+185.113**

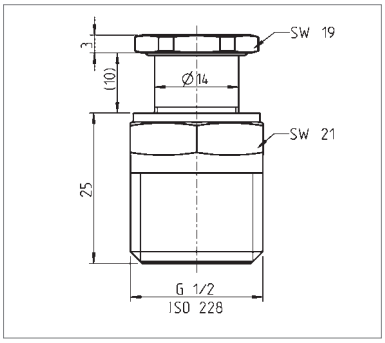

ООО "ПРОВЕРТ" www.prowert.ru info@prowert.ru +7 (495) 108-05-38

ООО "ПРОВЕРТ" www.prowert.ru info@prowert.ru +7 (495) 108-05-38

Flow Meter

Flow meter for compressed air and gases	model 840	**2**
Model 840 - Functions and advantages		**3**

ООО "ПРОВЕРТ" www.proverts.ru info@proverts.ru +7 (495) 108-05-38

Flow meter model 840

The flow meter type 840 works according to the approved calorimetric measuring principle: In this process a heated sensor is cooled down by the gas circulating around it. The flowdependent cooling-down is used as a measuring effect while the degree of cooling-down is directly depending on the passing air resp. gas mass. Therefore, an additional pressure and temperature compensation is not necessary.
Due to its compact design it is possible to monitor all compressed air systems from the compressor to the smallest compressed air tool (1/4 inch to 2 inch) with the flow meter type 840. This device is designed for compressed air and nitrogen. For other gases like oxygen, carbon dioxide, argon, nitrous oxide more types are available on request.
The installation can be done easily and quickly. A special advantage is the removable measuring device: The measuring device can be demounted quickly and easily for calibration or cleaning purposes without removing the complete measuring section.

Order key:

840.x xx

		measuring range (compressed air)
20	- R 1/4	0,8 - 90 l/min
21	- R 1/2	0,2 - 90 m³/h
22	- R 3/4	0,3 - 170 m³/h
23	- R1	0,5 - 290 m³/h
26	- R1 1/4	0,7 - 480 m³/h
28	- R1 1/2	1,0 - 550 m³/h
29	- R2	2,0 - 900 m³/h

1	- up to 16 bar
4	- up to 40 bar

*for example: **840.123** = 16 bar, R1, 0,5 - 290 m³/h*

Application range

- Compressed air balancing, compressed air consumption measurement
- Leakage air / leak rate determination
- Mobile compressed air measurement in front of single machines/plants
- Flow measurement of process gases like e. g. nitrogen, CO2, oxygen, argon, nitrous oxide
- Flow measurement at nitrogen generators

Accessories

	Order No.
Closing cap for mearuring section, aluminium	**840-210**
Mains unit 100-240 VAC / 24 VDC, 0,35 A, cable 2 m	**840-212**

Technical data

Connection thread measuring section*	R 1/4, R 1/2, R 3/4, R1, R1 1/4, R1 1/2, R2
Parameters	
- with compressed air	m³/h, l/min (DIN 1945, ISO 1217 - 1000 mbar, 20 °C)
- with gases	Nm³/h, Nl/min (DIN 1343 - 1013,25 mbar, 0 °C)
Adjustable via keypad	m³/h, m³/min, l/min, l/s, ft/min, cfm, m/s, kg/h, kg/min
Measuring principle	calorimetric measuring
Sensor	2 x silicon chip
Measuring medium	air, nitrogen gas types upon request: argon, CO_2, oxygen, nitrous oxide
Measuring range	see table
Accuracy	±1,5 % of measurement value, ±0,05 % of end value upon request: special calibration via 5 point-ISO-calibration certificate
Compressed air counter	up to 1.999.999.999 m³, resettable to "zero" via keypad
Operating temperature	-30 up to +80 °C
Max. operating pressure p_1	up to 16 bar (as option up to 40 bar)
Analogue output	4 - 20 mA for m³/h or l/min
Pulse output	1 pulse per m³ resp. per liter, galvanically separated
PC connection	SDI interface
Power supply	24 VDC smoothed ±15 %
Burden	<500 Ohm
Material	
- housing	polycarbonate
- measuring section	stainless steel 1.4301 (16 bar) stainless steel 1.4404 (40 bar)
Waste electrical and electronic equipment	WEEE reg. No. DE51604370

* DIN EN 10226 (ISO 7-1)

ООО "ПРОВЕРТ" www.provert.ru info@provert.ru +7 (495) 108-05-38

Model 840 - Functions and advantages

Application-technological features:

Your advantages at a glance

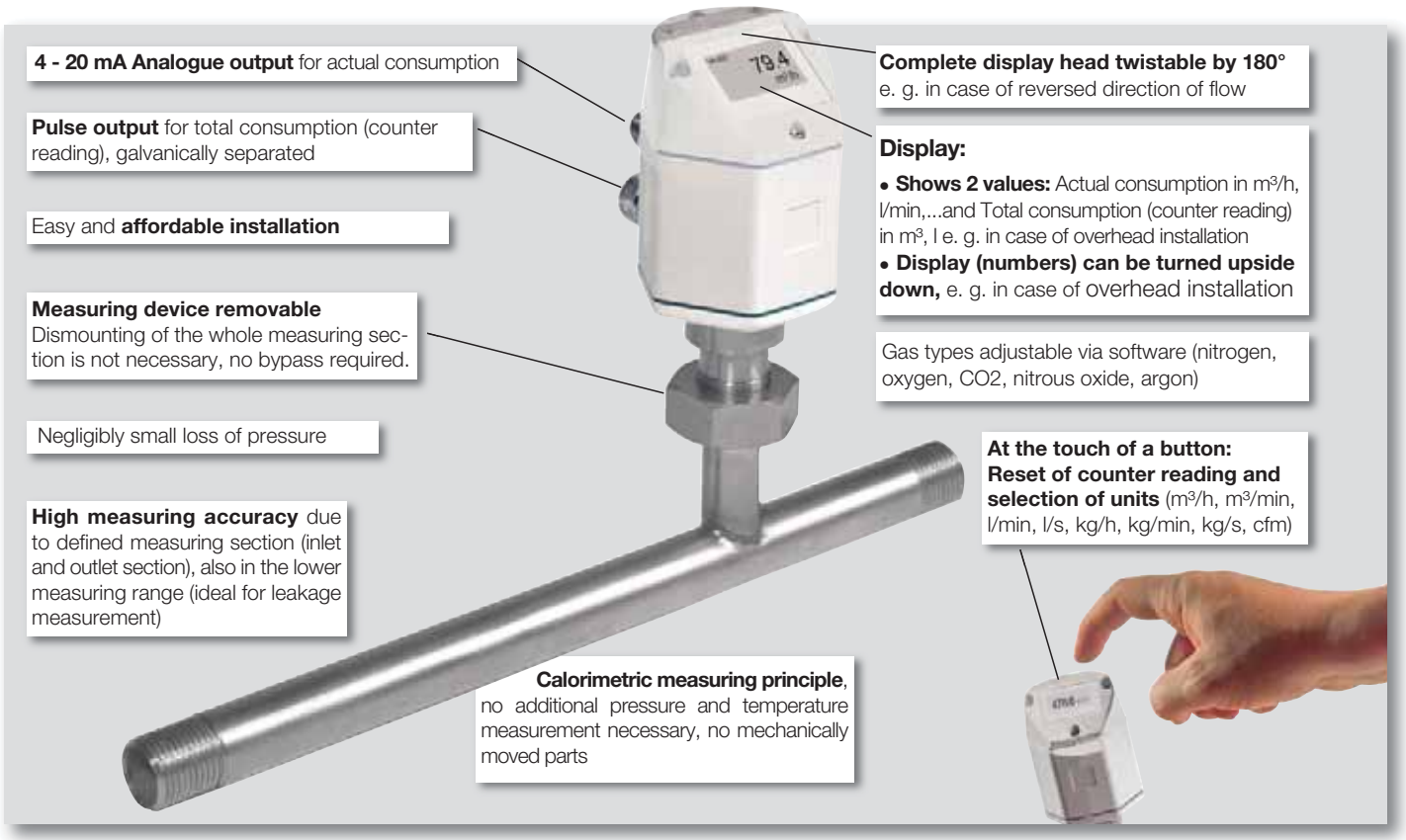

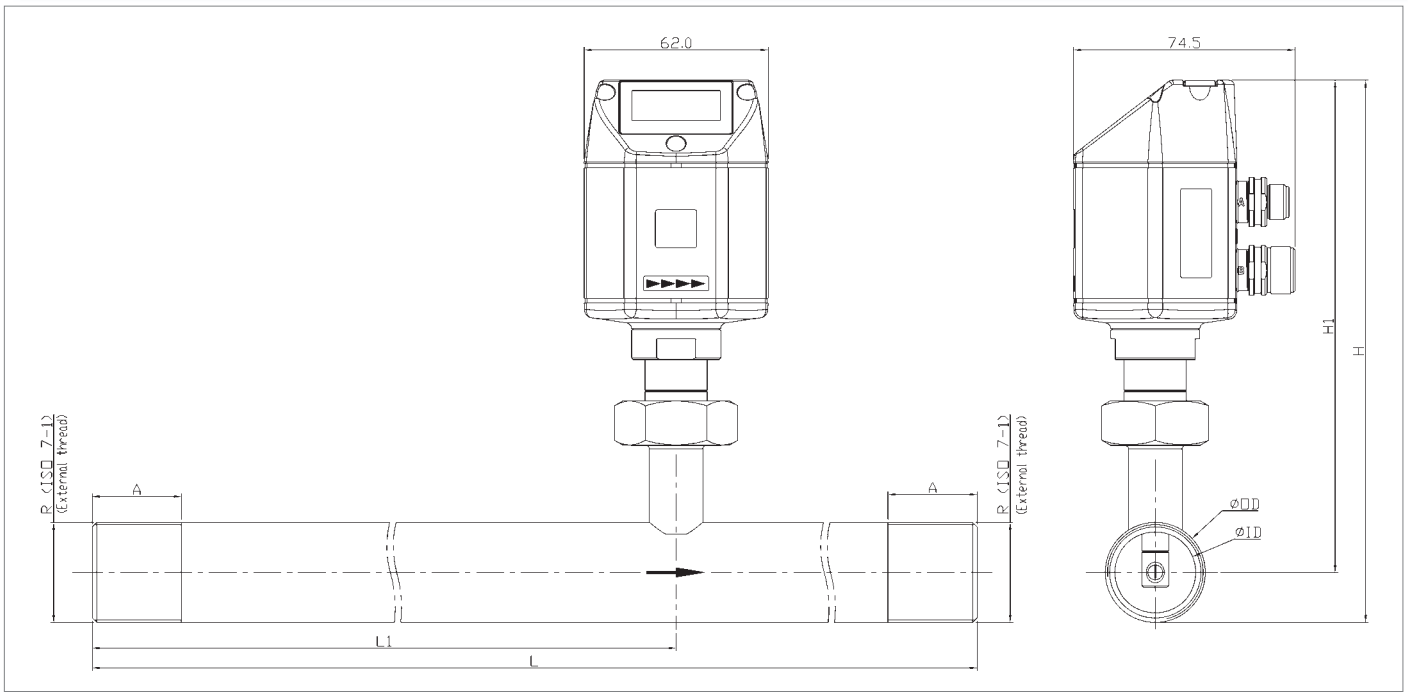

Dimensions [mm]

Connection	Outer pipe dia.	Inner pipe dia.	Measuring range	L	L1	H	H1	A
R1/4	DN 8	Ø13,7	Ø 8,5	194	137	174,7	165,7	15
R1/2	DN15	Ø21,3	Ø16,1	300	210	176,4	165,7	20
R3/4	DN20	Ø26,9	Ø21,7	475	275	179,2	165,7	20
R1	DN25	Ø33,7	Ø27,3	475	275	182,6	165,7	25
R1 1/4	DN32	Ø42,4	Ø36,8	475	275	186,9	165,7	25
R1 1/2	DN40	Ø48,3	Ø41,8	475*	275	189,9	165,7	25
R2	DN50	Ø60,3	Ø53,1	475*	275	195,9	165,7	30

*Attention: Shortened inlet section! Please observe the recommended minimum inlet section (length = 10 x inner diameter) on site.

Notes

ООО "ПРОВЕРТ" www.provert.ru info@provert.ru +7 (495) 108-05-38

Compressed Air Accessories I
Couplings, Threaded connections

Couplings	DN 2,7 Micro-couplings and plugs	**2**
	DN 5 Mini couplings and plugs	**3**
	DN 5,5 Couplings with ORION profil	**4**
	DN 5,5 Multi-couplings and plugs	**5**
	DN 5,5 Safety couplings with push-button, rotatable, ARO profile	**6**
	DN 7,2 Standard couplings and plugs, brass	**7**
	DN 7,2 Standard couplings and plugs, brass, both sides shut-off	**8**
	DN 7,2 Backflow dampers, ball swivel connectors, two and three way distributors	**9**
	DN 7,2 Standard couplings, steel, steel plugs with euro profile	**10**
	DN 7,4 Safety couplings with push-button; with push-button and swivel connector	**11**
	DN 7,4 Safety couplings with push-button, swivel connector, stainless steel	**12**
	DN 7,8 Safety couplings	**13**
	DN 7,8 High flow couplings; high flow couplings with NPT thread	**14**
	DN 10 Couplings and plugs	**15**
	DN 12 Garage couplings and plugs	**16**
	GEKA couplings	**17**
Threaded connections	Threaded fittings	**18 – 21**
	Hose connections (brass)	**22 – 23**
	High speed connections	**24 – 28**
	Rapid-action screw-fittings for plastic hose	**29 – 30**

ООО "ПРОВЕЕТ" www.proweet.ru info@proweet.ru +7(495) 108-05-38

DN 2,7 Micro-couplings and plugs

One side sealing one-handed quick release with extremely small dimensions and high pass at low pressure drop. **Brass nickel-plated**.

310.101

310.102

310.105

310.084

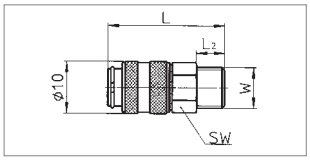

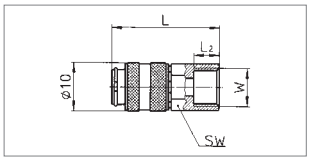

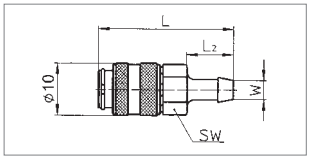

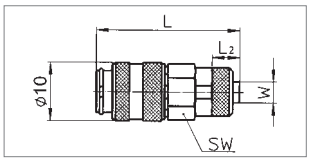

Connection W	Dimensions (mm) L	L_2	SW	Order No.
Couplings				
With male thread				
M5	26	5	9	**310.001**
G 1/8	28	7	11	**310.101**
With female thread				
M5	25	5	9	**310.002**
G 1/8	28	7	12	**310.102**
With hose connection				
LW3	35	13	-	**310.105**
LW4	35	13	-	**310.103**
With rapid-action screw-fitting				
4x3	34	7	9	**310.084**
5x3	34	7	9	**310.094**
6x4	34	7	9	**310.104**

310-020

310-030

310-048

310.184

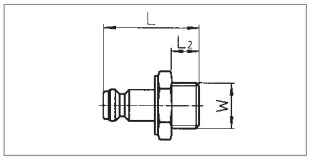

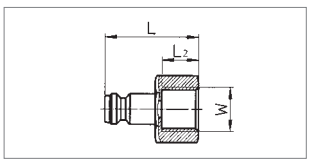

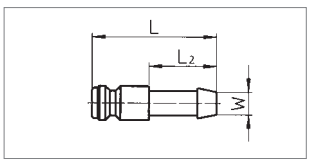

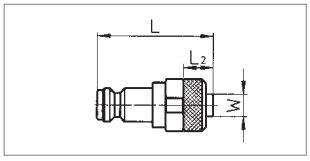

Plugs				
With male thread				
M5	18	5	7	**310-010**
G 1/8	20	7	11	**310-020**
With female thread				
M5	17	5	7	**310-021**
G 1/8	18	7	12	**310-030**
With hose connection				
LW3	24	13	-	**310-048**
LW4	24	13	-	**310-049**
With rapid-action screw-fitting				
4x3	7	25	7	**310.184**
5x3	7	25	7	**310.194**
6x4	5,8	24	-	**310.204**

Remark

All DN 2,7 plugs are compatible with all DN 2,7 couplings.

Compatible with:
Rectus 20KA

Technical data

Nominal rates of flow*		210 Nl/min
Max. operating pressure (p_1)		16 bar (PN35) (at pressures above 35 bar connecting and disconnecting not possible)
Min. operating pressure (p_1)		1 bar
Operating temperature		-20 °C up to +100 °C
Mounting position		any (coupling preferably before plug in the direction of flow)
Direction of flow		any
Material	- housing/cover	brass nickel-plated
	- seals	NBR
	- springs	V2A

* Measured at 6 bar pre-pressure (p_1) and Δp = 1 bar

ООО "ПРОВЕРТ" www.prowert.ru info@prowert.ru +7 (495) 103-05-38

DN 5 Mini couplings and plugs

One-hand-operation, rapid-action coupling with ball lock. Shut-off valve in the coupling, automatically unlocked when coupled. Without non-return valve in the plug. **Brass nickel-plated.**

Couplings

Connection W	Dimensions (mm) L	i	SW	Order No.
With male thread				
G 1/8	36	7	14	**320.101**
G 1/4	38	9	17	**320.111**
With female thread				
G 1/8	37	6	14	**320.102**
G 1/4	38	8	17	**320.112**
With hose connection				
LW 4	47	17	14	**320.103**
LW 6	47	17	14	**320.113**
With rapid-action screw-fitting				
6x4 M10x1	43	7	14	**320.104**
8x6 M12x1	43	7	14	**320.114**

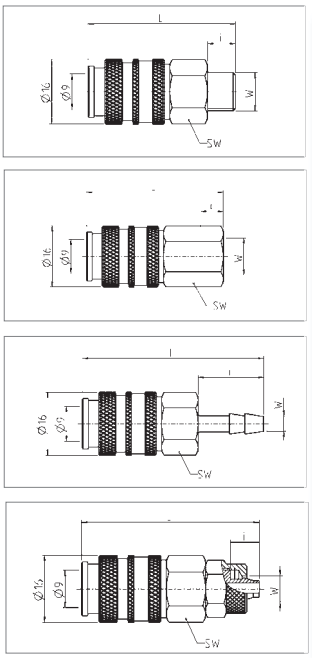

Plugs

Connection W	Dimensions (mm) L	i	SW	Order No.
With male thread				
G 1/8	28	6	14	**320-020**
G 1/4	28	8	17	**320-021**
With female thread				
G 1/8	25	6	14	**320-030**
G 1/4	26	8	17	**320-031**
With hose connection				
LW 4	33	18	-	**320-049**
LW 6	33	18	-	**320-050**
With rapid-action screw-fitting				
6x4 M10x1	33	7	14	**320.204**
8x6 M12x1	33	7	14	**320.214**

Undetachable seal rings see page 30.

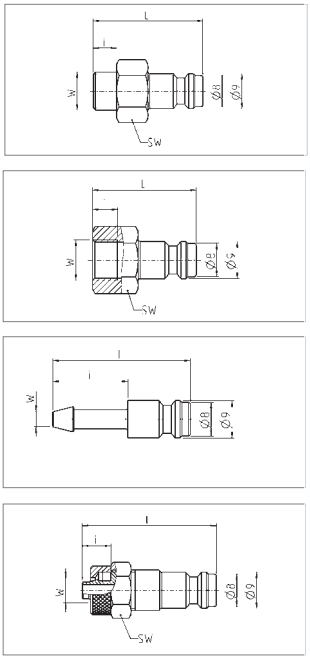

Technical data

Nominal rates of flow*		500 Nl/min
Max. operating pressure (p_1)		16 bar (PN 35) (at pressures above 35 bar connecting and disconnecting not possible)
Min. operating pressure (p_1)		1 bar
Operating temperature		-10 °C up to +90 °C
Mounting position		any (coupling preferably before plug in the direction of flow)
Direction of flow		any
Material	- housing / cover	brass nickel-plated/ brass bright (discontinued model)
	- seals	NBR
	- springs	V2A

* Measured at 6 bar pre-pressure (p_1) and Δp = 1 bar

Remark

All DN 5 plugs are compatible with all DN 5 couplings. Compatible with: Rectus 21KA

ООО "ПРОВЕЕТ" www.proweet.ru info@proweet.ru +7(495) 108-05-68

DN 5,5 Couplings with ORION profile

Industrial coupling with high flow performance. Especially suitable for use with gaseous media in the industry. **Brass nickel-plated.**

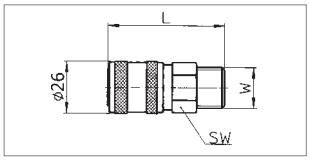

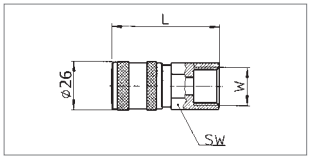

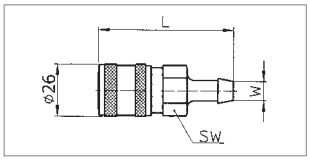

Connection W	L	SW	Order No.
Couplings			
With male thread			
G 1/4	46,5	22	**314.001**
G 3/8	47,5	22	**314.021**
With female thread			
G 1/4	44,5	22	**314.002**
G 3/8	47,5	22	**314.022**
With hose connection			
LW 7	57,6	21	**314.023**
LW 9	57,6	22	**314.026**
LW 10	57,6	24	**314.027**

Plugs

Suitable plugs see right page (312-xxx).

Remark

All plugs of the 312-xxx series are compatible with all DN 5,5 couplings.

Technical data

Nominal rates of flow*		820 Nl/min
Max. operating pressure (p_1)		15 bar (PN35) (at pressures above 35 bar connecting and disconnecting not possible)
Min. operating pressure (p_1)		1 bar
Recommended operating pressure (p_2)		10 bar
Operating temperature		-20 °C up to +80 °C
Mounting position		any (coupling preferably before plug in the direction of flow)
Direction of flow		any
Material	- housing/cover	brass nickel-plated
	- seals	NBR
	- springs, circlip	stainless steel 1.4301
	- balls	steel

* Measured at 6 bar pre-pressure (p_1) and Δp = 1 bar

ООО "ПРОВЕРТ" www.prowert.ru info@prowert.ru +7 (495) 103-05-38

DN 5,5 Multi couplings and plugs

Industrial coupling with high flow performance. Especially suitable for use with gaseous media in the industry. **Brass nickel-plated.**

Connection W	Dimensions (mm) L	SW	Order No.
Couplings			
With male thread			
G 1/4	55	19	**312.001**
G 3/8	55	19	**312.021**
G 1/2	55	19	**312.041**
With female thread			
G 1/4	53	19	**312.002**
G 3/8	58	19	**312.022**
G 1/2	58	24	**312.042**
With hose connection			
LW6	67	19	**312.023**
LW8	67	19	**312.026**
LW9	67	19	**312.024**
LW10	67	19	**312.027**
LW13	67	19	**312.025**
With rapid-action screw-fitting			
8x6	57	19	**312.114**
10x8	62	19	**312.124**
With rapid-action screw-fitting + Knickschutz			
8x6	130	19	**312.164**
10x8	135	19	**312.174**

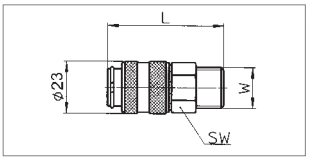

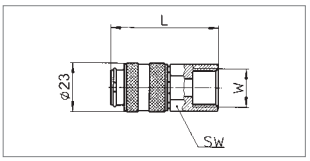

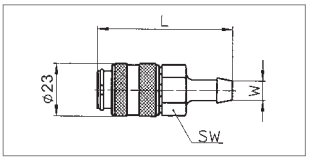

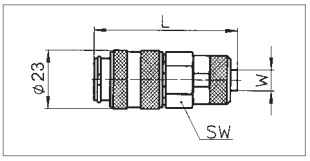

Plugs

Connection W	Dimensions (mm) L	SW	Order No.
With male thread			
G 1/4	38	17	**312-053**
G 3/8	38	19	**312-054**
G 1/2	40	24	**312-057**
With female thread			
G 1/4	38	17	**312-055**
G 3/8	38	19	**312-056**
G 1/2	40	24	**312-058**
With hose connection			
LW6	51	-	**312-050**
LW8	51	-	**312-075**
LW10	51	-	**312-076**
LW13	51	-	**312-052**

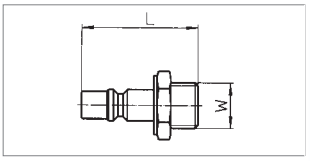

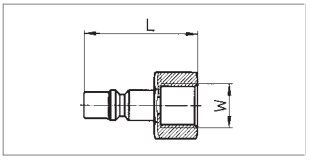

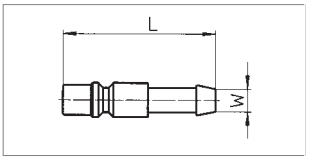

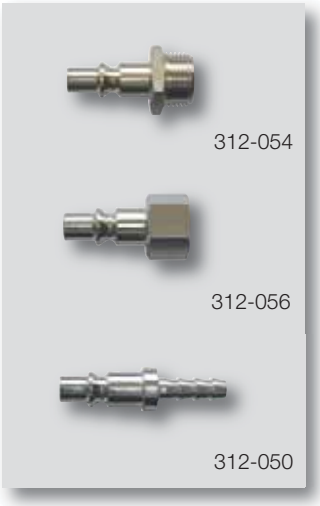

Technical data

Nominal rates of flow*		700 Nl/min
Max. operating pressure (p_1)		16 bar (PN35) (at pressures above 35 bar connecting and disconnecting not possible)
Min. operating pressure (p_1)		1 bar
Operating temperature		-20 °C up to +100 °C
Mounting position		any (coupling preferably before plug in the direction of flow)
Direction of flow		any
Material	- housing/cover	brass nickel-plated
	- seals	NBR
	- springs, circlip	stainless steel 1.4310
	- balls	stainless steel 1.4034

* Measured at 6 bar pre-pressure (p_1) and Δp = 1 bar

Remark

All plugs of the 312-xxx series are compatible with all DN 5,5 couplings.

Compatible with:
ARO 210
CEJN 300
ewo 308
JWL 522 + JWL 532
ORION 44510
PARKER 50
RECTUS 14, 22 + 26

ООО "ПРОВЕЕТ" www.proweet.ru info@proweet.ru +7(495) 108-05-38

DN 5,5 Safety couplings with push-button, rotatable, with ARO profile

This safety coupling according ISO 4414 with a push-button avoids the so-called whip effect when the plug is decoupled. With the materials used, this high-quality coupling is characterized by stability and compactness. Couplings with a rotatable connection allow to bring the push-button into the desired position, when the coupling itself is permanently installed. The coupling is free of silicone!

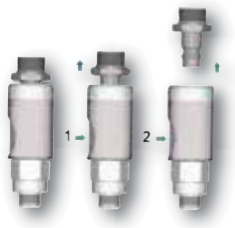

Handling:

Step 1: By a single actuation of the push-button, the coupling is vented, the plug is further secured in the sleeve.

Step 2: When the push-button is pressed a second time, the connector is unlocked and can be removed safely.

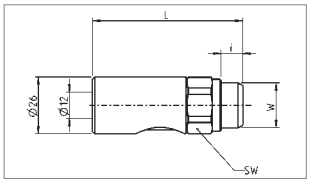

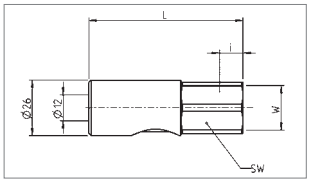

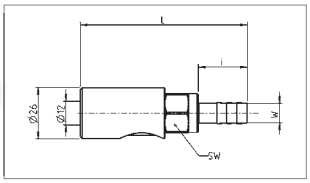

Couplings

Connection W	Dimensions (mm) L	SW	Order No.
With male thread			
G 1/4	76	20	**414.201**
G 3/8	76	20	**414.221**
G 1/2	81	20	**414.241**
With female thread			
G 1/4	75	20	**414.202**
G 3/8	77	20	**414.222**
G 1/2	79	20	**414.242**
With hose connection			
LW 6	88,5	21	**414.223**
LW 9	88,5	21	**414.224**
LW 13	88,5	21	**414.225**

Plugs

Suitable plugs see page 5 (312-xxx).

Remark

All plugs of the 312-xxx series are compatible with all DN 5,5 couplings.

Technical data

Nominal rates of flow*		1.000 Nl/min
Max. operating pressure (p_1)		10 bar
Operating temperature		-20 °C up to +150 °C
Mounting position		any (coupling preferably before plug in the direction of flow)
Direction of flow		any
Material	- housing entry	brass nickel-plated
	- housing middle	aluminium eloxiert
	- housing outlet	steel galvanized
	- seals	NBR
	- springs	stainless steel 1.4310
	- balls	stainless steel 1.4034
	- plug	brass nickel-plated

* Measured at 6 bar pre-pressure (p_1) and Δp = 1 bar

ООО "ПРОВЕРТ" www.prowert.ru info@prowert.ru +7 (495) 103-05-38

DN 7,2 Standard couplings and plugs

One-hand-operation, rapid-action coupling with needle lock and non return valve. Shut-off valve in the coupling, automatically unlocked when coupled. Plug is without non-return valve. **Brass. Optional available in nickel plated brass.**

Connection W	Dimensions (mm) L	i	SW	Order No.
Couplings				
With male thread				
G 1/8	41	9	21	**308.028***
G 1/4	41	9	21	**308.001***
G 3/8	41	9	21	**308.021***
G 1/2	42,5	10,5	21	**308.041***
G 1/2	45	10,5	24	**308.081***
M14x1,5	41	9	21	**308.814**
M16x1,5	41	9	21	**308.816**
M18x1,5	41	9	21	**308.818**
With female thread				
G 1/8	41	8	21	**308.029**
G 1/4	41	8	21	**308.002**
G 3/8	41	9	21	**308.022**
G 1/2	43	10	24	**308.042**
M14x1,5	43	9	21	**308.824**
M16x1,5	43	9	21	**308.826**
M18x1,5	43	9	21	**308.828**
With hose connection				
LW6	57	25	21	**308.023**
LW8	57	25	21	**308.026**
LW9	57	25	21	**308.024**
LW10	57	25	21	**308.027**
LW13	57	25	21	**308.025**

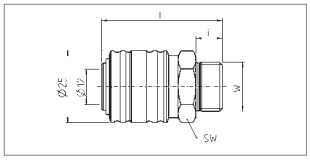

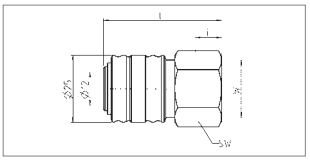

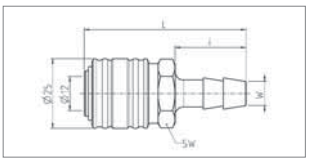

***** As **additional option** as **self-sealing** type (with seal-ring or with coated thread) available! Order key: **Order No.** with addition **D**, i. e. 308.028**D**

Undetachable seal ring see page 30

Plugs				
With male thread				
G 1/8	31	7	14	**308-061***
G 1/4	33	9	17	**308-053***
G 3/8	33	9	19	**308-054***
G 1/2	35	10	24	**308-057***
With female thread				
G 1/8	30	6	14	**308-062**
G 1/4	33	9	17	**308-055**
G 3/8	33	9	19	**308-056**
G 1/2	33	9	24	**308-058**
With hose connection				
LW4	45	25	-	**308-074**
LW6	45	25	-	**308-050**
LW8	45	25	-	**308-075**
LW9	45	25	-	**308-051**
LW10	45	25	-	**308-076**
LW13	45	25	-	**308-052**
With rapid-action screw-fitting				
6x4mm	38	13	14	**308.700**
8x6mm	38	13	14	**308.720**
10x8mm	42	17	17	**308.740**

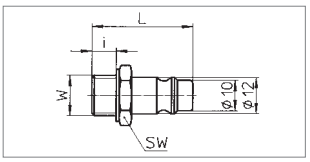

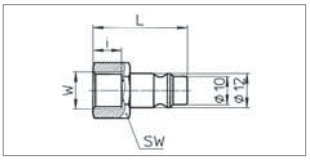

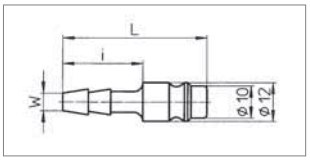

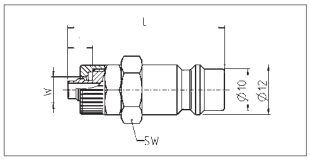

Technical data

Nominal rates of flow acc. to ISO 6358		1.500 Nl/min (p_1 = 6 bar, Δp = 1 bar)
Flow medium		compressed air pre-filtered with 40 µm
Max. operating pressure (p_1)		16 bar
Temperature range		-10 °C up to +90 °C
Mounting position		any
Direction of flow		preferably coupling before plug
Material	- coupling / plug	brass
	- seals	NBR
	- springs	spring steel
	- rolls	stainless steel

Remark

All plugs of the 308 series are compatibel with all DN 7,2 and DN 7,8 couplings.

Packaging units with 5 / 10 / 50 pieces

ООО "ПРОВЕЕТ" www.proweet.ru info@proweet.ru +7(495) 108-05-68

DN 7,2 Standard couplings and plugs – both sides shut-off

Both sides shut-off one-hand coupling with roll locking mechanism. Non-return valve in the coupling and in the plug, unlocked when coupled. After disconnect the connection stops the flow in both the coupling and the plug. The medium remains in both connecting lines in the system, the pressure is not reduced and remains constant. **Brass.**

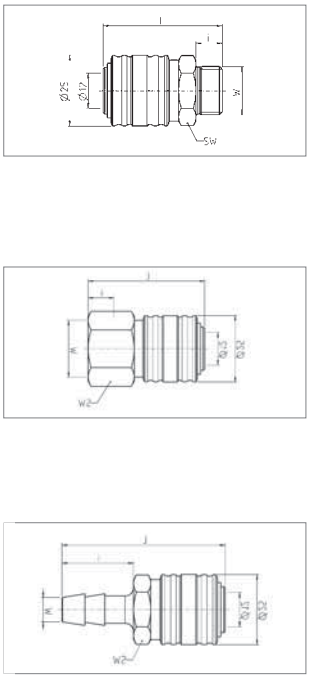

Couplings

Connection W	Dimensions (mm) L	i	SW	Order No.
With male thread				
G 1/8	41	9	21	**308.211**
G 1/4	41	9	21	**308.212**
G 3/8	41	9	21	**308.213**
G 1/2	42,5	10,5	21	**308.214**
M14x1,5	41	9	21	**308.215**
M16x1,5	41	9	21	**308.216**
M18x1,5	41	9	21	**308.217**
With female thread				
G 1/8	41	8	21	**308.301**
G 1/4	41	8	21	**308.302**
G 3/8	41	8	21	**308.303**
G 1/2	43	10	24	**308.304**
M14x1,5	43	9	21	**308.305**
M16x1,5	43	9	21	**308.306**
M18x1,5	43	9	21	**308.307**
With hose connection				
LW 6	57	25	21	**308.401**
LW 8	57	25	21	**308.402**
LW 9	57	25	21	**308.403**
LW 10	57	25	21	**308.404**
LW 13	57	25	21	**308.405**

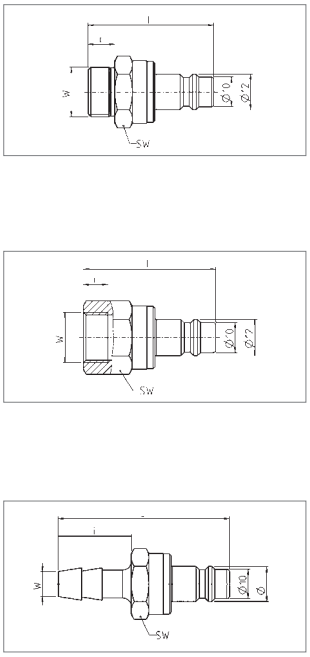

Plugs

With male thread				
G 1/8	43	9	21	**308.501**
G 1/4	43	9	21	**308.502**
G 3/8	43	9	21	**308.503**
G 1/2	44,5	10,5	21	**308.504**
M14x1,5	43	9	21	**308.505**
M16x1,5	43	9	21	**308.506**
M18x1,5	43	9	21	**308.507**
With female thread				
G 1/8	43	8	21	**308.601**
G 1/4	43	8	21	**308.602**
G 3/8	44	8	21	**308.603**
G 1/2	45	10	24	**308.604**
M14x1,5	45	9	21	**308.605**
M16x1,5	45	9	21	**308.606**
M18x1,5	45	9	21	**308.607**
With hose connection				
LW 6	59	25	21	**308.701**
LW 8	59	25	21	**308.702**
LW 9	59	25	21	**308.703**
LW 10	59	25	21	**308.704**
LW 13	59	25	21	**308.705**

Remark

All plugs of the 308 series are compatibel with all DN 7,2 and DN 7,8 couplings.

Technical data

Nominal rates of flow ISO 6358		675 Nl/min (p_1 = 6 bar, Δp = 1 bar)
Flow medium		compressed air pre-filtered with 40 µm
Max. operating pressure (p_1)		16 bar
Temperature range		-10 °C up to +90 °C
Mounting position		any
Direction of flow		preferably coupling before plug
Material	- coupling / plug	brass
	- seals	NBR
	- springs	spring steel
	- rolls	stainless steel

ООО "ПРОВЕРТ" www.prowert.ru info@prowert.ru +7 (495) 103-05-38

DN 7,2 Backflow dampers

Backflow dampers avoid the so-called whipflash effect by gentle ventilation when disconnecting. Brass.

Connection W	Order No.
LW 6	308.810
LW 8	308.820
LW 9	308.830
LW 10	308.840
LW 13	308.850

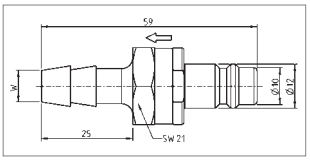

DN 7,2 Ball swivel connectors

Reliably prevents kinking, crushing and rotational loads. With a 360 ° rotation axis and the pivot connection 30 °, the efficiency and flexibility of installation to increase particularly in pneumatic tools.
This swivel connectors are suitable for percussive tools such as pneumatic wrenches or pneumatic nailer.

Connection W	Dimensions Length (mm)	Order No.
With male thread		
G 1/4	54,7	308-453
G 3/8	54,7	308-454
G 1/2	56,7	308-457
With female thread		
G 1/4	54,7	308-455
G 3/8	54,7	308-456
G 1/2	56,7	308-458

Technical data

Nominal rates of flow ISO 6358	1.000 Nl/min (p_1 = 6 bar, Δp = 1 bar)
Max. operating pressure (p_1)	25 bar
Operating pressure (p_1)	10 bar
Fluid and ambient temperature	-20 °C up to +80 °C
Mounting position	any
Direction of flow	preferably coupling before plug
Material	steel nickel plated

Remark

All DN 7,2 plugs are compatible with all DN 7,2 and DN 7,8 couplings

DN 7,2 Rapid-action coupling – distributors

One-hand-operation, rapid-action coupling with needle lock and non return valve. Shut-off valve in the coupling, automatically unlocked when coupled. Plug is without non-return valve. Made of brass. Brass distributor with steel couplings for use in situations subject to heavy wear.

Connection W	Order No. Brass couplings	Steel couplings
Two way distributors with male thread		
G 1/4	128.006	-
G 3/8	128.007	-
G 1/2	128.008	-
Two way distributors with female thread		
G 1/4	128.003	-
G 3/8	128.004	128.104
G 1/2	128.005	-

Three way distributors with male thread		
G 1/4	128.056	-
G 3/8	128.057	-
G 1/2	128.058	-
Three way distributors with female thread		
G 1/4	128.053	-
G 3/8	128.054	128.154
G 1/2	128.505	128.155

ООО "ПРОВЕЕТ" www.proweet.ru info@proweet.ru +7(495) 108-05-38

DN 7,2 Standard couplings and plugs – steel

One-hand-operation, rapid-action coupling with needle lock and non return valve. Shut-off valve in the coupling, automatically unlocked when coupled. Plug is without non-return valve. Steel couplings for use in situations subject to heavy wear.

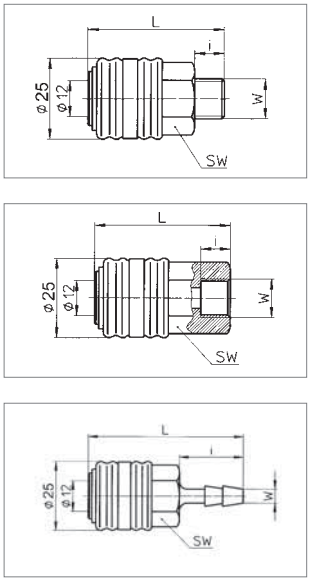

Connection W	Dimensions (mm) L	SW	Order No.
Couplings			
With male thread			
G 1/8	41	21	**308.128**
G 1/4	41	21	**308.101**
G 3/8	41	21	**308.121**
G 1/2	41	21	**308.141**
With female thread			
G 1/8	41	21	**308.129**
G 1/4	41	21	**308.102**
G 3/8	41	21	**308.122**
G 1/2	43	24	**308.142**
With hose connection			
LW6	57	21	**308.123**
LW8	57	21	**308.126**
LW9	57	21	**308.124**
LW10	57	21	**308.127**
LW13	57	21	**308.125**

Plugs with Euro profile

Steel coupling plugs are characterized by longer shelf-life compared to brass coupling connections. Recommended for use with safety couplings and clutches high flow types 476 / 455 / 411. (see following pages).

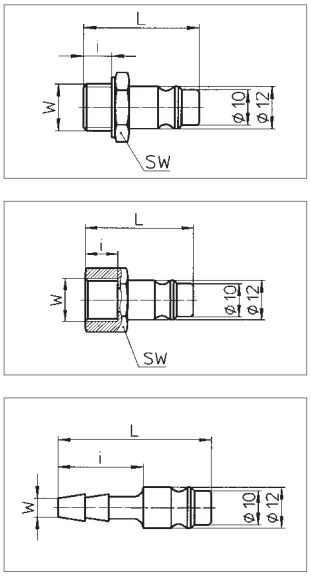

With male thread			
G 1/4	33	17	**308-153**
G 3/8	33	19	**308-154**
G 1/2	33	24	**308-157**
With female thread			
G 1/4	33	17	**308-155**
G 3/8	33	19	**308-156**
G 1/2	33	24	**308-158**
With hose connection			
LW4	45	-	**308-174**
LW6	45	-	**308-150**
LW8	45	-	**308-175**
LW9	45	-	**308-151**
LW10	45	-	**308-176**
LW13	45	-	**308-152**

Remark

All DN 7,2 plugs are compatible with all DN 7,2, DN 7,4 and DN 7,8 couplings.

Technical data

Nominal rates of flow ISO 6358		1.300 Nl/min (p_1 = 6 bar, Δp = 1 bar)
Flow medium		compressed air pre-filtered with 40 µm
Max. operating pressure (p_1)		16 bar
Temperature range		-10 °C up to +90 °C
Mounting position		any
Direction of flow		preferably coupling before plug
Material	- coupling	steel
	- plug	steel galvanized
	- seals	NBR
	- springs	spring steel
	- rolls	stainless steel

ООО "ПРОВЕРТ" www.prowert.ru info@prowert.ru +7 (495) 103-05-38

DN 7,4 Safety couplings with push button

This safety coupling according ISO 4414 with a push-button avoids the so-called whip effect when the plug is decoupled. With the materials used, this high-quality coupling is characterized by stability and compactness. **Coupling also available as model with swivel connector.**

Handling:

Step 1: By a single actuation of the push button, the coupling is vented, the plug is further secured in the sleeve.

Step 2: When the push button is pressed a second time, the connector is unlocked and can be removed safely.

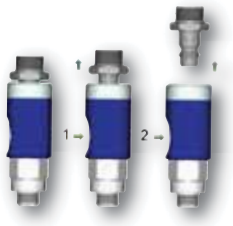

Connection W	Dimensions (mm) L	i	SW	Order No.
With male thread				
G 1/4	68,5	8	20	**411.001**
G 3/8	69,5	9	20	**411.021**
G 1/2	69,5	10	24	**411.041**
With female thread				
G 1/4	68	10	20	**411.002**
G 3/8	72,5	11	20	**411.022**
G 1/2	73	11	24	**411.042**
With hose connection				
LW 6	88,5	25	20	**411.023**
LW 8	88,5	25	20	**411.026**
LW 9	88,5	25	20	**411.024**
LW 10	88,5	25	20	**411.027**
LW 13	88,5	25	20	**411.025**

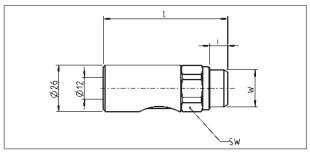

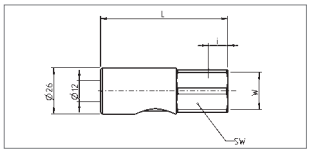

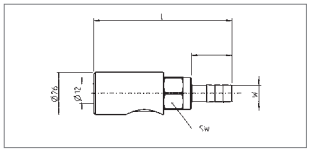

411.021
411.022
411.023

Model with swivel connector

Safety couplings with a rotatable connector (swivel joint) allow for fixed-mounted clutches that the push-button operation can be placed on the ergonomically favorable position. Axis of rotation = 360 °.

With male thread				
G 1/4	76	6	20	**411.201**
G 3/8	76	7	20	**411.221**
G 1/2	81	8	20	**411.241**
With female thread				
G 1/4	75	12	20	**411.202**
G 3/8	77	12	20	**411.222**
G 1/2	79	13	24	**411.242**

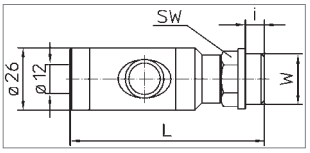

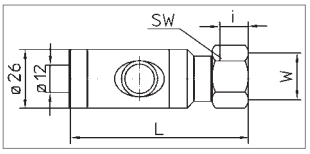

411.221
411.222

Plugs

Suitable plugs see page 10 (308-xxx).

Remark

We recommend steel plugs when using this safety coupling.

Technical data

Nominal rates of flow*		1.800 Nl/min (measured at 6 bar pre-pressure (p_1) and Δp = 1 bar)
Max. /Min. operating pressure (p_1)		12 bar / 1 bar
Operating temperature		-10 °C up to +90 °C
Mounting position		any (coupling preferably before plug in the direction of flow)
Direction of flow		any
Material	- housing inlet	brass nickel-plated
	- housing middle	aluminum anodized
	- housing outlet / plug	steel galvanized
	- seals	NBR
	- springs / balls	stainless steel 1.4310 / stainless steel 1.4034

OOO "TIPOBEPT" www.prowert.ru info@prowert.ru +7 (495) 108-05-38

DN 7,4 Safety couplings with push button, swivel connector - stainless steel

This safety coupling (silicone-free) according ISO 4414 with a push-button avoids the so-called whip effect when the plug is decoupled. With the materials used, this high-quality coupling is characterized by stability and compactness. Safety Couplings with rotatable connector (swivel joint) allow for fixed-mounted clutches that the push-button operation can be placed on the ergonomically favorable position. Axis of rotation = 360°.

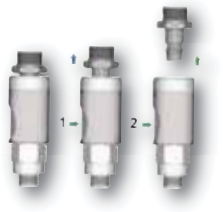

Handling:

Step 1: By a single actuation of the push button, the coupling is vented, the plug is further secured in the sleeve.

Step 2: When the push button is pressed a second time, the connector is unlocked and can be removed safely.

Couplings

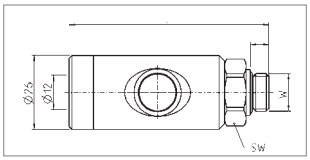

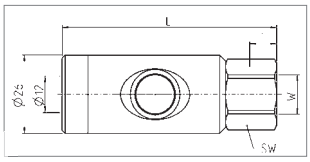

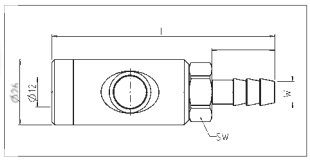

Connection W	L	i	SW	Order No.
With male thread				
G 1/4	70,5	6,5	21	**413.201**
G 3/8	70,0	7	21	**413.221**
G 1/2	72,5	8,5	25	**413.241**
With female thread				
G 1/4	71,5	9	21	**413.202**
G 3/8	75,5	10	21	**413.222**
G 1/2	77,5	11	24	**413.242**
With hose connection				
LW 6	88,5	25	21	**413.223**
LW 9	88,5	25	21	**413.224**
LW 13	88,5	25	21	**413.225**

Plugs

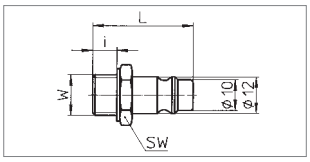

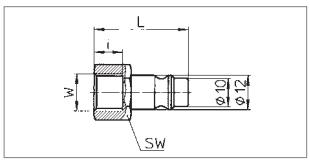

With male thread		
G 1/4	33	17	**413-053**
G 3/8	33	19	**413-054**
With female thread		
G 1/4	33	17	**413-055**
G 3/8	33	19	**413-056**

Remark

All DN 7,4 plugs are compatible with all DN 7,4, DN 7,2 and DN 7,8 couplings.

Technical data

Nominal rates of flow*		1.800 Nl/min (measured at 6 bar pre-pressure (p_1) and Δp = 1 bar)
Max. operating pressure (p_1)		10 bar
Operating temperature		-20 °C up to +150 °C
Mounting position		any (coupling preferably before plug in the direction of flow)
Direction of flow		any
Material	- housing inlet	stainless steel 1.4404
	- button and valve	stainless steel
	- internal parts	stainless steel
	- thread	stainless steel
	- seals	FKM

ООО "ПРОВЕРТ" www.prowert.ru info@prowert.ru +7 (495) 103-05-38

DN 7,8 Safety couplings

Safety coupling with two-stage relieving according ISO 4414, DIN EN 983. Slightly pushing back the sleeve opens the first lock. Coupling closes and at the same time presses the plug into the second position; the remaining pressure in the plug is able to escape. If the sleeve is pushed back again the plug is released and can be disconnected without danger. Brass nickel-plated.
For longer wear we recommend only steel plugs!

Couplings

With male thread

Connection W	Dimensions (mm) L	i	SW	Order No.
G 1/4	62	9	24	**455.001**
G 3/8	62	9	24	**455.021**
G 1/2	62	12	24	**455.041**

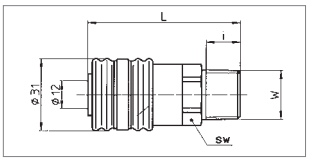

455.041

With female thread

G 1/4	58	9	24	**455.002**
G 3/8	58	9	24	**455.022**
G 1/2	58	12	24	**455.042**

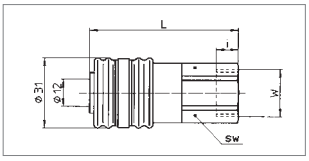

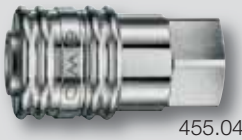
455.042

With hose connection

With a rubber protecting ring.

LW 6	77	25	24	**455.023**
LW 8	77	25	24	**455.026**
LW 9	77	25	24	**455.024**
LW 10	77	25	24	**455.027**
LW 13	77	25	24	**455.025**

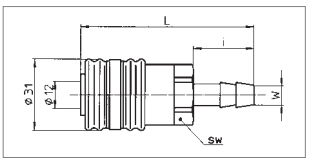

455.024

Plugs

Suitable plugs see page 10 (308-xxx).

Remark

We recommend steel plugs when using this safety coupling.

Not recommended for direct connection to percussive tools such as impact wrenches.

Technical data

Nominal rates of flow*		1.800 Nl/min
Max. operating pressure (p_1)		8 bar (possible to 16 bar in coupled condition (increased effort is necessary)
Min. operating pressure (p_1)		1 bar
Operating temperature		-10 °C up to +90 °C
Mounting position		any (coupling preferably before plug in the direction of flow)
Direction of flow		any
Material	- housing / cover	brass nickel-plated
	- seals	NBR
	- springs / shots and Pins	stainless steel 1.4310 / stainless steel 1.4034
	- plug	steel galvanized

* Measured at 6 bar pre-pressure (p_1) and Δp = 1 bar

ООО "ПРОВЕРТ" www.prowert.ru info@prowert.ru +7 (495) 108-05-38

DN 7,8 High flow couplings

One-hand - operation, rapide-action with needle lock and non return valve. Coupling with a high flow rate. A robust body for big pneumatic consumers. **Brass nickel-plated.**

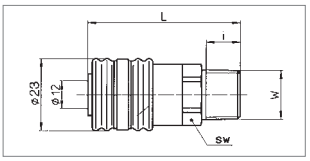

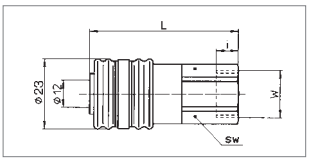

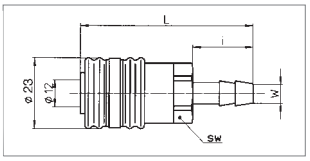

Couplings

Connection W	Dimensions (mm) L	i	SW	Order No.
With male thread				
G 1/4	63	12	19	**476.001**
G 3/8	63	13	21	**476.021**
G 1/2	63	15	24	**476.041**
With female thread				
G 1/4	63	12	19	**476.002**
G 3/8	63	15	21	**476.022**
G 1/2	63	15	24	**476.042**
With hose connection				
LW 6	76	25	19	**476.023**
LW 8	76	25	19	**476.026**
LW 9	76	25	19	**476.024**
LW 10	76	25	19	**476.027**
LW 13	76	25	19	**476.025**

Model with NPT thread

NPT (pipe thread NPT, National Pipe Thread) threads is an American thread standard for pipe fittings. When screwing the NPT, in addition, a sealant is needed.

With NPT male thread			
G 1/4" NPT	63	19	**311.001**
G 3/8" NPT	63	21	**311.021**
G 1/2" NPT	63	24	**311.041**
With NPT female thread			
G 1/4" NPT	63	19	**311.002**
G 3/8" NPT	63	21	**311.022**
G 1/2" NPT	63	24	**311.042**
With hose connection			
LW 6	76	19	**311.023**
LW 9	76	19	**311.024**
LW 13	76	19	**311.025**

Plugs

Suitable plugs see page 10 (308-xxx).

Remark

We recommend steel plugs when using this safety coupling.

Remark

All DN 7,8 plugs are compatible with all DN 7,8 and DN 7,2 couplings.

Technical data

Nominal rates of flow*		2.300 Nl/min
Max. / Min. operating pressure (p_1)		16 bar / 1 bar
Operating temperature		-10 °C up to +100 °C
Mounting position		any (coupling preferably before plug in the direction of flow)
Direction of flow		any
Material	- housing / cover	brass nickel-plated
	- seals	NBR
	- springs / shots and pins	stainless steel 1.4310 / stainless steel 1.4034
	- plug	steel galvanized

* Measured at 6 bar pre-pressure (p_1) and Δp = 1 bar

ООО "ПРОВЕРТ" www.prowert.ru info@prowert.ru +7 (495) 103-05-38

DN 10 Couplings and plugs

One-hand-operation, rapid-action coupling with needle lock and non return valve for higher flow capacity. Shut-off valve in the coupling, automatically unlocked when coupled. Plug is without non-return valve. **Brass.**

Couplings

With male thread

Connection W	Dimensions (mm) L	L_2	SW	Order No.
G 1/2	65	12	301	**354.061**

With female thread

Connection W	Dimensions (mm) L	L_2	SW	Order No.
G 1/2	65	12	30	**354.071**

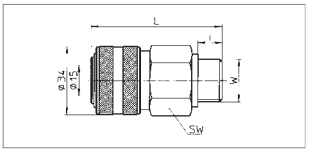

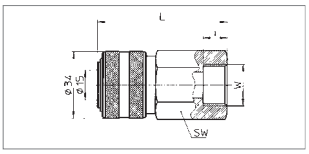

With hose connection

By mounting the coupling (female thread G 1/2) with a threaded nozzle (male thread G 1/2).

LW 13	**354.071 + 160-3**
LW 16	**354.071 + 160-3c**
LW 19	**354.071 + 160-3a**

Plugs

With male thread

Connection W	Dimensions (mm) L	i	D	SW	Order No.
G 1/2	42	12	27		**354-059**

With female thread

Connection W	Dimensions (mm) L	i	D	SW	Order No.
G 1/2	40	12	27		**354-060**

With hose connection

Connection W	Dimensions (mm) L	i	D	SW	Order No.
LW 13	55	33	-		**354-053**

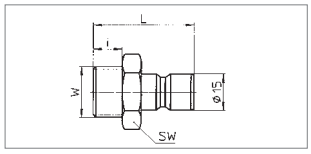

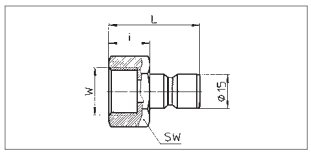

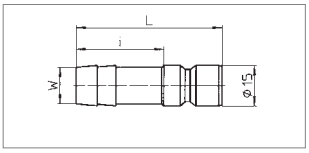

Two-way distributor

Connection	Order No.
G 1/2	**128.04**

Threaded nozzles with male thread G 1/2

With this nozzle the coupling part No. 354.071 can be modified to a hose connection (see above).

Connection W	Dimensions (mm) L	i	D	SW	Order No.
LW 13 (1/2")	58	10	ø 10	20	**160-3**
LW 16 (5/8")	58	10	ø 11	20	**160-3c**
LW 19 (3/4")	58	10	ø 12	20	**160-3a**

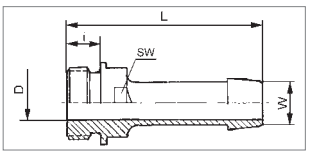

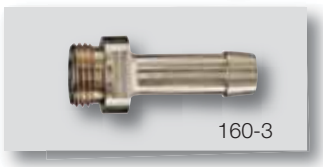

Technical data

Nominal rates of flow*		3.200 Nl/min (at 6 bar pre-pressure (p_1) and Δp = 1 bar)
Max. operating pressure (p_1)		16bar (PN 35) (at pressures above 35 bar connecting and disconnecting not possible)
Min. operating pressure (p_1)		1 bar
Operating temperature		-10 °C up to +90 °C
Mounting position		any (coupling preferably before plug in the direction of flow)
Direction of flow		any
Material	- housing/cover	brass
	- seals	NBR
	- springs	V2A

Remark

All DN 10 plugs are compatible with all DN 10 couplings.

ООО "ПРОВЕЕТ" www.proweet.ru info@proweet.ru +7(495) 108-05-38

DN 12 Garage couplings and plugs

Coupling with ball lock for high flow capacity. Non return valve in the coupling. With lip seal, thus also suitable for neutral fluids. With an rubber ring as protection against wear. **Brass.**

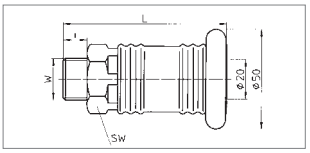

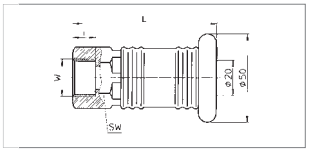

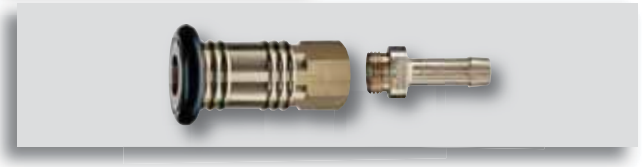

Connection W	Dimensions (mm) L	i	D	SW	Order No.
Couplings					
With male thread					
G 1/2	82	12	-	30	**254.01**
G 3/4	82	12	-	30	**254.03**
With female thread					
G 1/2	82	12	-	30	**254.11**
G 3/4	82	12	-	30	**254.13**

With hose connection

By mounting the coupling (female thread G 1/2) with a threaded nozzle (male thread G 1/2).

LW 13	**254.11 + 160-3**
LW 16	**254.11 + 160-3c**
LW 19	**254.11 + 160-3a**

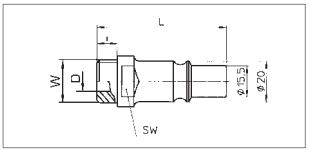

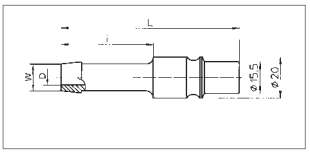

Plugs

With male thread

G 1/2	54	9	ø 6	17	**254-27**
G 3/4	63	10	ø10	20	**160-20**

With hose connection

LW 13	87	45	ø 10,0	-	**254-30**
LW 16	87	45	ø12,5	-	**254-31**
LW 19	87	45	ø12,5	-	**254-32**

Two-way distributor

G 1/2	**128.03**

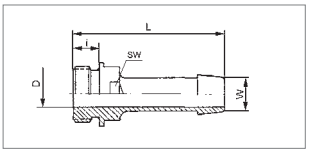

Threaded nozzles with male thread G 1/2

With this nozzle the coupling part No. 254.11 can be modified to a hose connection (see above).

Connection W	Dimensions (mm) L	i	D	SW	Order No.
LW 13 (1/2")	58	10	ø10	20	**160-3**
LW 16 (5/8")	58	10	ø11	20	**160-3c**
LW 19 (3/4")	58	10	ø12	20	**160-3a**

Technical data

Nominal rates of flow*		4.000 Nl/min
Max. operating pressure (p_1)		16 bar (PN 35) (at pressures above 35 bar connecting and disconnecting not possible)
Min. operating pressure (p_1)		1 bar
Operating temperatures		-10 °C up to +50 °C (air) / +5 °C up to +50 °C (water)
Mounting position		any (coupling preferably before plug in the direction of flow)
Direction of flow		any
Material	- Housing	brass
	- Seals	NBR
	- Springs	V2A

* Measured at 6 bar pre-pressure (p_1) and Δp = 1 bar

Remark

All DN 12 plugs are compatible with all DN 12 couplings.

ООО "ПРОВЕРТ" www.prowert.ru info@prowert.ru +7 (495) 103-05-38

GEKA couplings

For a save, easy and fast coupling and decoupling as well as to extend flexible hose pipes and -systems (Water-, Industry, Compressed air, suction and pressure hoses in dimensions G 3/8 - 10 mm up to G 1 1/2 - 38 mm, also among themselves) and rigid pipes and -systems (metal and plastic pipes, thread dimensions G 1/4 up to G 1 1/2).
Locking nubs for best safety to avoid to release of the connection also in clutched pressureless state. The claws have a uniform distance of 40 mm. Form sealing ring = NBR.
Material brass CW617N (CuZn40Pb2) acc. to DIN 50930/6.
Operating pressure 8 bar (40 bar version available - Order No. with suffix **P**)
Vacuum resistance (with form sealing ring) up to 10 m water column, WS (static benchmarked).

Connection SLW/G	Dimensions (mm) NW	L	LT/T	Order No.

GEKA Tail of hose

Plug with distinctive and hose saving ribbed profil for close hold of the hose.
For hose clamp and crimp sleeve.

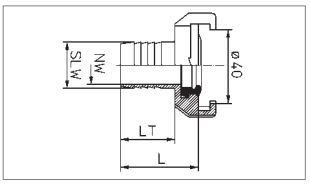

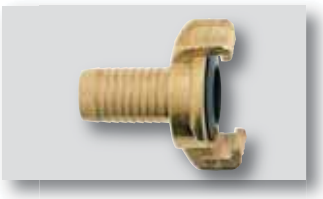

10 (3/8")	7,5	40	28	**516.150**
13 (1/2")	10	40	28	**516.151**
16 (5/8")	13,5	44	32	**516.152**
19 (3/4")	17	44	32	**516.153**
25 (1")	21,5	50	37	**516.154**
32 (1 1/4")	28	60	48	**516.155**
38 (1 1/2")	34	63	48	**516.156**

GEKA SH Tail of hose

Vacuum and high pressure. With threaded ring (threaded ring back screw, clutch, dress threaded ring).

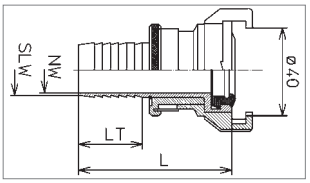

13 (1/2")	10	67	31	**516.361**
19 (3/4")	15	71	35	**516.362**
25 (1")	20	76	42	**516.363**
32 (1 1/4")	28	82	46	**516.364**

Spare part

	PU 10 pcs.
GEKA form sealing ring SH, NBR, black	**516-9**
Temperature range from -30 °C up to +100 °C,	

GEKA Threaded part

With male thread

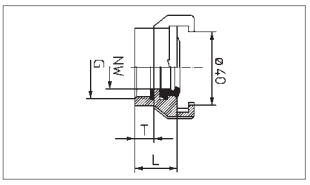

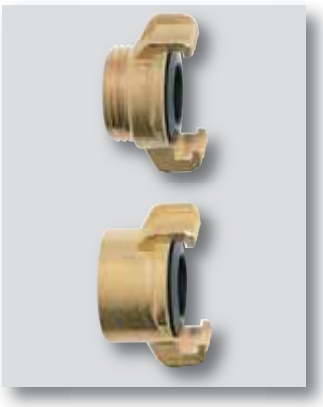

G 1/4	8	22	8	**516.210**
G 3/8	11,5	22	8	**516.211**
G 1/2	15	22	8	**516.212**
G 3/4	20	22	8	**516.213**
G 1	23	22	8	**516.214**
G 1 1/4	23	26	13	**516.215**
G 1 1/2	23	26	13	**516.216**

With female thread

thread laterally with flat sealing ring SBR (up to 100 °C)

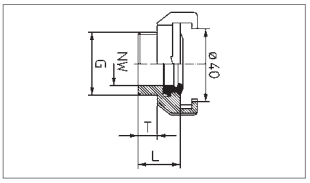

G 1/4	11	21	9,5	**516.200**
G 3/8	11	21	9,5	**516.201**
G 1/2	14	21	9,5	**516.202**
G 3/4	19	22	10,5	**516.203**
G 1	23	23	11	**516.204**
G 1 1/4	23	28	13,5	**516.205**
G 1 1/2	23	29	14	**516.206**

GEKA Blind coupling

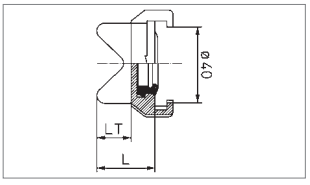

-	-	27	15	**516.174**

GEKA High performance form sealing rings

	PU 10 pcs.
High performance form sealing ring (insert), NBR, black Temp. range from -30°C up to +100°C,	**516-6**
High performance form sealing ring, NBR - foodstuff resistant, red Temp. range from -30°C up to +100°C (KTW-approval)	**516-7**
High performance form sealing ring, EPDM, black - yellow marked Temp. range from -50°C up to +150°C	**516-8**

GEKA Flat sealing ring SBR

For threaded part with female thread. Temp. range up to +100 °C.

Dimensions approx.	13 x 8 x 1,5		**516-1**
	17 x 11 x 1,5		**516-2**
	20,5 x 14 x 1,5		**516-3**
	26 x 18 x 2		**516-4**
	33 x 23 x 2		**516-5**

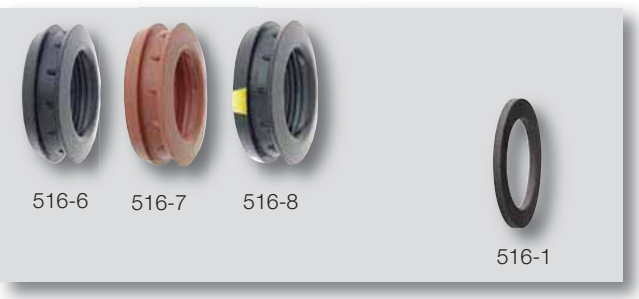

ООО "ПРОВЕЕР" www.prower.ru info@prower.ru +7(495) 108-05-68

Threaded fittings – ceiling elbows 90°, distributors

Material brass.

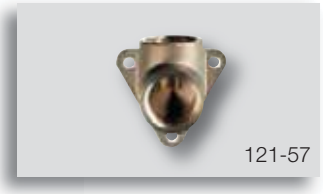

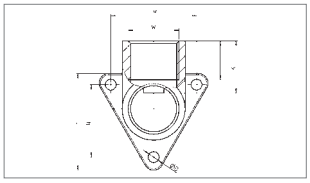

Ceiling elbows 90° (for wall fastening) with female thread

Connection W	Dimensions (mm) L	M	N	K	i	D	Order No.
2xG3/8	35	30	26	18,5	11	4,5	**121-55**
2xG1/2	40	35,5	30	21,5	16	4,5	**121-56**
2xG3/8	51	45	39	28	13	4,5	**121-57**

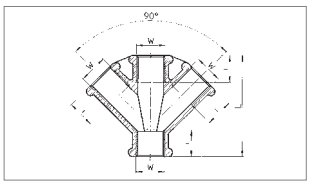

Distributors (3-way and 4-way) with female thread

3xG3/8	48	-	-	-	14	-	**121-35**
3xG1/2	54	-	-	-	15	-	**121-50**
4xG3/8	61	-	-	-	14	-	**121-34**
4xG1/2	67	-	-	-	18	-	**121-54**

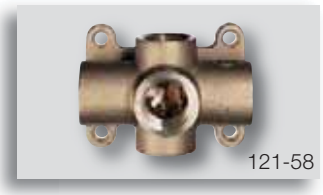

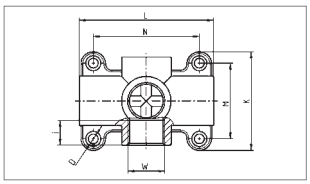

Distributor with 5 outlets (G 1/2) with female thread

5xG1/2	74	43,5	59	57	15	5,5	**121-58**

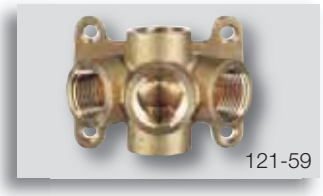

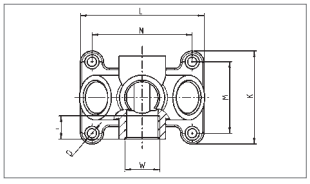

Distributor with 5 outlets (G 1/2) with female thread

5xG1/2	74	43,5	59	57	15	5,5	**121-59**

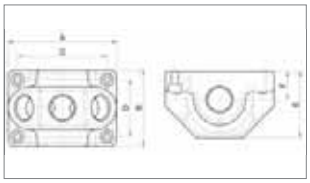

Distribution blocks with female thread

Made of glasfibre reinforced plastic PA6 with brass sleeves.

Connection Inlet + Outlets	Dimensions [mm] A	B	C	D	E	F	Order No.
G1/2 + 2x G1/2	85	60	70	44	52	22	**121-70**
G1/2 + 3x G1/2	85	60	70	44	52	22	**121-71**

ООО "ПРОВЕРТ" www.prowert.ru info@prowert.ru +7 (495) 103-05-38

Threaded fittings – double nippels

For connecting compressed air units or installations of similar equipment. Some of the thread connectors are equipped with a cone for attaching a hose connector with ball nippel seal.

Connection W x V	Dimensions (mm) L	i	k	d	SW	Order No.
With male thread, long – with cone 45° (EN 560)						
G 1/8 x G 1/8	29	9,5	9,5	5	12	**185.29**
G 1/4 x G 1/8	32	12	9,5	5	14	**185.30**
G 1/4 x G 1/4	34	12	12	7	14	**185.33**
G 3/8 x G 1/4	36	13,5	12	7	17	**185.53**
G 1/4 x G 1/2	38	12	15,5	7	22	**185.54**
G 3/8 x G 3/8	37	13,5	13,5	10	17	**185.55**
G 1/2 x G 3/8	40	15,5	13,5	10	22	**185.75**
G 1/2 x G 1/2	44	15,5	15,5	12	22	**185.77**
G 1/2 x G 3/4	43	15	15	12	30	**185.78**
G 3/4 x G 3/4	42	15	15	19	30	**415-13***
G 3/4 x G 1	50	15	16	19	36	**415-15**
G 1 x G 1	55	16	16	22	36	**415-14***

* without cone

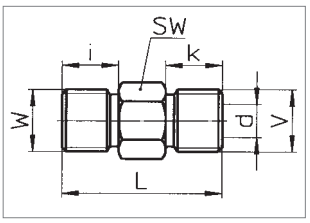

Connection W x V	Dimensions (mm) L	i	k	d	SW	Order No.
With male thread, short – with cone 45° (EN 560)						
G 1/8 x G 1/8	19	7	7	5	12	**185.029**
G 1/8 x G 1/4	20,5	7	8,5	5	14	**185.030**
G 1/4 x G 1/4	22	8,5	8,5	7	14	**185.033**
G 1/4 x G 3/8	24	8,5	9,5	7	17	**185.053**
G 1/4 x G 1/2	25,5	8,5	11	7	22	**185.054**
G 3/8 x G 3/8	25	9,5	9,5	10	17	**185.055**
G 3/8 x G 1/2	26,5	9,5	11	10	22	**185.075**
G 1/2 x G 1/2	28	11	11	12	22	**185.077**
G 1/2 x G 3/4	33	11	14	12	30	**185.078**
G 3/4 x G 3/4	36	14	14	19	30	**185.013**
G 3/4 x G 1	40	14	16	19	36	**185.015**
G 1 x G 1	42	16	16	22	36	**185.014**
G 1 1/2 x G 1 1/2	50	20	20	36	50	**280-228**
G 2 x G 2	55	20	20	40	65	**454-9**

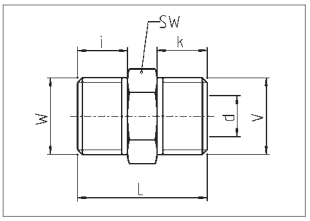

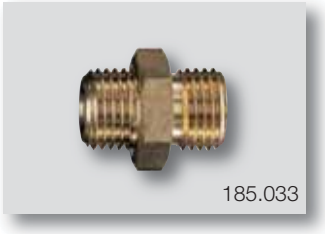

Connection W x V	Dimensions (mm) L	i	k	d	SW	Order No.
With female/male thread						
G 1/8 x G 1/8	20	8	8	5	14	**185.129**
G 1/4 x G 1/4	24	10	10	8	17	**185.133**
G 3/8 x G 3/8	29	11	12	10	22	**185.155**
G 1/2 x G 1/2	30	12	12	15	26	**185.177**
G 1/8 x G 1/4	22	8	10	8	14	**185.130**
G 1/4 x G 1/8	22	10	8	5	17	**185.131**
G 1/4 x G 1/2	27	10	12	10	22	**185.132**
G 3/8 x G 1/4	27	11	10	8	22	**185.153**
G 3/8 x G 1/2	29	11	12	13	22	**185.154**
G 1/2 x G 3/8	30	12	12	10	26	**185.175**
G 1/2 x G 3/4	34	12	16	17	32	**185.176**
G 3/4 x G 1/2	37	15	16	15	32	**185.178**

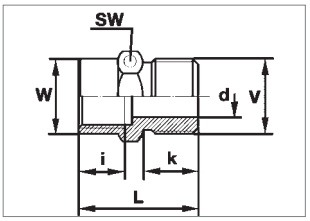

With male thread, detachable (3-part), with conical thread

Connection W x V	Dimensions [mm] DN	L	i	k	SW1	SW	Order No.
R 1/8 x R 1/8	5,3	27	9	9	5	15	**185.311**
R 1/8 x R 1/4	5,3	30	9	12	5	15	**185.312**
R 1/4 x R 1/4	6,3	34	12	12	6	19	**185.322**
R 1/4 x R 3/8	6,3	35	12	13	6	19	**185.324**
R 3/8 x R 3/8	8,5	36	13	13	8	22	**185.344**
R 1/2 x R 1/2	13	44	16	16	12	27	**185.366**
R 3/4 x R 3/4	15	52	18	18	14	36	**185.388**
R 1 x R 1	20	65	22	22	19	46	**185.399**

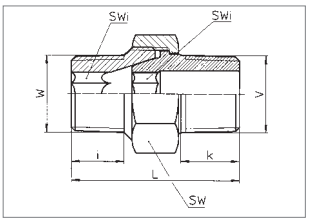

ООО "ПРОВЕЕР" www.prowerr.ru info@prowerr.ru +7(495) 108-05-38

Threaded fittings – sleeves, reductions etc.

185.112

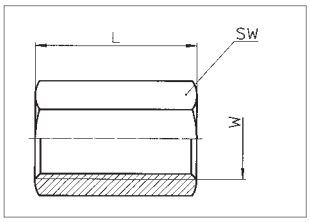

Sleeves (2-way) with female thread

Connection W	Dimensions [mm] L	SW	Order No.
G 1/8	22	14	185.110
G 1/4	26	17	185.111
G 3/8	26	22	185.112
G 1/2	30	27	185.113
G 3/4	33	32	185.114
G 1	35	40	185.115

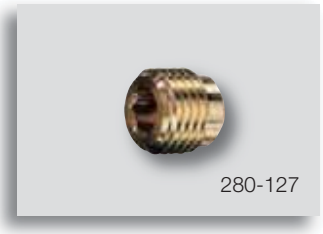
280-127

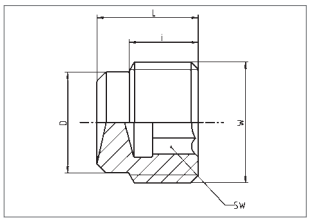

Screw plugs with male thread

Connection W	Dimensions [mm] L	i	D	SW	Order No.
G 1/8	8	5	8	5	323-14
G 1/4	11	7	11	6	280-127
G 3/8	10	8	14	8	447-28
G 1/2	12	8	18	10	424-67

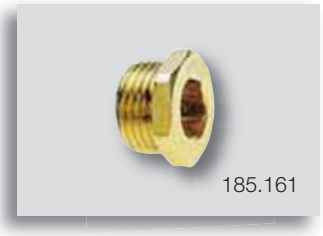
185.161

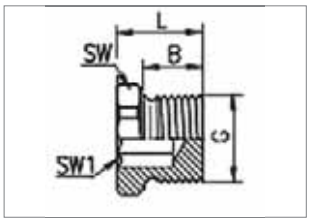

Blind plugs with male thread, with external and internal hexagon

and with turned sealing surface for sealing ring DIN 7603

Connection W	Dimensions [mm] L	B	SW1	SW	Order No.
G 1/8	10	6,5	5	14	185.160
G 1/4	13	8,5	8	17	185.161
G 3/8	15	10,5	10	19	185.162
G 1/2	19	13,5	12	24	185.163
G 3/4	20	14,0	14	32	185.164
G 1	22	16,0	17	36	185.165

1068

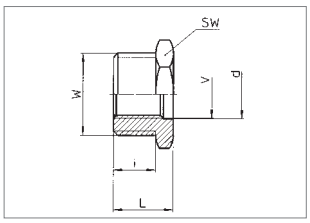

Reductions with male and female thread, with hexagon nut

For reducing female threads or expanding male threads.

Connection W x V	Dimensions [mm] L	i	D	SW	Order No.
G 1/4 x G 1/8	12	9	10	17	1117
G 3/8 x G 1/8	12	8,5	10	19	322-18
G 3/8 x G 1/4	12	8,5	13,5	19	1068
G 1/2 x G 1/4	15,5	11,5	13,5	22	1191
G 1/2 x G 3/8	15,5	11,5	17	22	1018
G 3/4 x G 1/2	18	12	21	32	1292
G 1 x G 3/4	18	12	27	36	1193
G 1 1/2 x G 1 1/4	21	15	42,5	50	409-81
G 2 x G 1 1/4	30	20	43	65	417-50
G 2 x G 1 1/2	30	20	49	65	417-45

Technical data

Max. operating pressure (p_1)	63 bar (PN 63)
Operating temperature	-10 °C up to +90 °C
Mounting position / Direction of flow	any
Material	brass

ООО "ПРОВЕРТ" www.prowert.ru info@prowert.ru +7 (495) 108-05-38

Threaded fittings – 90° elbows, T-pieces

90° Elbows

Connection W	DN	L	M	i	SW	Order No.
With male thread with cone						
G 1/8	5	18	18	10	10	**185.82**
G 1/4	7	22	22	11	13	**185.83**
G 3/8	8	27	27	15	17	**185.85**
G 1/2	12	26	26	13	21	**185.87**
G 3/4	19	40	40	16	25	**185.88***
G 1	25	45	45	18	30	**185.89***
						* without cone
With female / male thread						
G 1/8	6	18,5	21,0	8,0	10	**185.42**
G 1/4	8	23,5	25,5	11,0	13	**185.43**
G 3/8	11	26,0	28,0	11,5	17	**185.45**
G 1/2	15	31,0	33,5	14,0	21	**185.47**
G 3/4	19	33,0	36,5	16,0	25	**185.48**
G 1	24	39,0	45,0	19,0	30	**185.49**

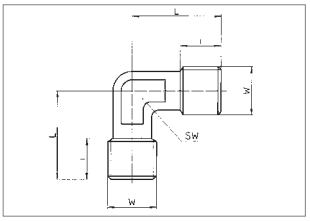

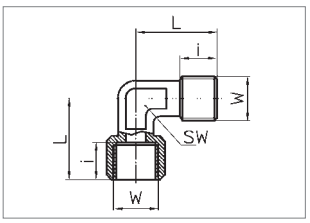

T-pieces

Connection W	DN	L	M	i	SW	Order No.
With male thread with cone						
G 1/8	5	35	17	7	10	**185.97**
G 1/4	8	47	24	12	13	**185.96**
G 3/8	9	52	26	12	17	**185.95**
G 1/2	12	54	27	13	21	**185.94**
G 3/4	19	80	38	19	25	**185.93***
G 1	25	90	42	20	30	**185.92***
						* without cone
With female / male / female thread						
G 1/8	6	42	18,5	8,0	10	**185.62**
G 1/4	8	51	23,5	11,0	13	**185.63**
G 3/8	11	56	26,0	11,5	17	**185.65**
G 1/2	15	67	31,0	14,0	21	**185.67**
G 3/4	19	73	33,0	16,5	25	**185.68**
G 1	24	90	39,0	19,0	30	**185.69**
With female / female / male thread						
G 1/8	6	39,5	21,0	8,0	10	**185.12**
G 1/4	8	49,0	23,5	11,0	13	**185.13**
G 3/8	11	54,0	28,0	11,5	17	**185.15**
G 1/2	15	64,5	33,5	14,0	21	**185.17**
G 3/4	19	69,5	36,5	16,5	25	**185.18**
G 1	25	84,0	45,0	19,0	33	**185.19**

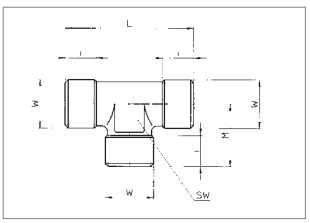

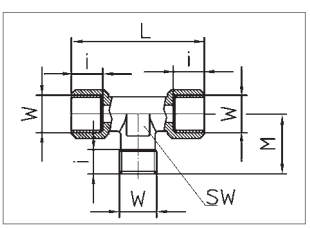

90° Elbows with female thread

Connection W	DN	L	M	i	Order No.
2xG 1/8	6	20	-	8	**185.182**
2xG 1/4	8	20	-	10	**185.183**
2xG 3/8	15	22,5	-	11	**185.185**
2xG 1/2	19	29	-	15	**185.187**
2xG 3/4	25	33	-	16	**185.188**
2xG 1	30	40,5	-	20	**185.189**

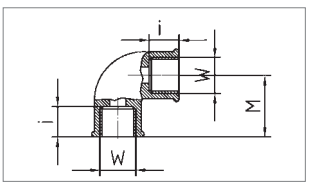

T-pieces with female thread

Connection W	DN	L	M	i	Order No.
3xG 1/8	8	36	18	9	**185.197**
3xG 1/4	11	36	19	10	**185.196**
3xG 3/8	15	44	23	12	**185.195**
3xG 1/2	19	59	29,5	17	**185.194**
3xG 3/4	25	66	34	15	**185.193**
3xG 1	30	76	39	22	**185.192**

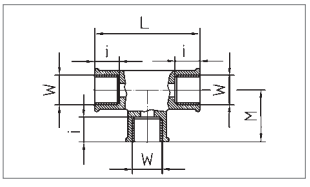

Technical data

Max. operating pressure (p_1)	63 bar (PN 63)
Operating temperature	-10 °C up to +90 °C
Mounting position / Direction of flow	any
Material	brass

ООО "ПРОВЕЕТ" www.proweet.ru info@proweet.ru +7(495) 108-05-68

Hose connections

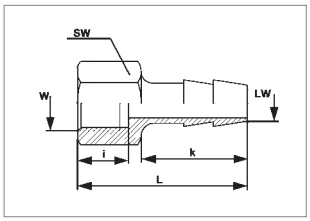

Hose tails

Connection W	Dimensions (mm) LW	L	i/K	SW	Order No.
With female thread (DIN 3852-Z)					
G 1/8	4	33	9/22	12	**113-9**
G 1/8	6	36	9/25	12	**113-10**
G 1/8	9	36	9/25	14	**113-11**
G 1/4	4	36	12/22	17	**113-12**
G 1/4	6	40	12/25	17	**113-13**
G 1/4	9	40	12/25	17	**113-14**
G 1/4	13	45	12/30	17	**113-15**
G 3/8	6	42	14/25	19	**113-16**
G 3/8	9	42	14/25	19	**113-17**
G 3/8	13	47	14/30	19	**113-18**
G 1/2	6	42	14/25	24	**113-19**
G 1/2	9	42	14/25	24	**113-20**
G 1/2	13	47	14/30	24	**113-21**
G 3/4	9	47	19/25	32	**113-22**
G 3/4	13	52	19/30	32	**113-23**
G 3/4	19	58	19/36	32	**113-24**
G 1	19	60	20/36	36	**113-31**
G 1	25	66	20/42	36	**113-32**
G 1	32	70	20/46	36	**113-33**

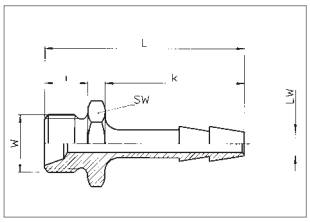

Connection W	Dimensions (mm) LW	L	i/K	SW	Order No.
With male thread and inside cone 45° (DIN 3852-Z)					
G 1/8	4	34	8/22	14	**113-41**
G 1/8	6	37	8/25	14	**113-51**
G 1/8	9	37	8/25	14	**113-52**
G 1/4	4	36	10/22	17	**113-68**
G 1/4	6	40	10/25	17	**113-31a**
G 1/4	9	40	10/25	17	**113-40a**
G 1/4	13	45	10/30	17	**113-71**
G 3/8	6	43	12/25	17	**113-32a**
G 3/8	9	43	12/25	17	**113-34a**
G 3/8	13	48	12/30	19	**113-43**
G 1/2	6	44	12/25	24	**113-67**
G 1/2	9	44	12/25	24	**113-66**
G 1/2	13	49	12/30	24	**113-44**
G 3/4	9	49	14/25	32	**113-25**
G 3/4	13	54	14/30	32	**113-26**
G 3/4	19	58	14/36	32	**113-27**
G 1	19	60	16/36	36	**113-28**
G 1	25	66	16/42	36	**113-29**
G 1	32	70	16/46	36	**113-30**

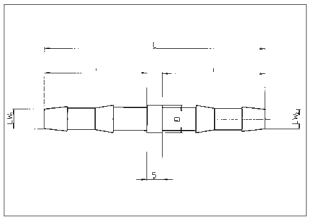

Double hose connectors

Acc. to EN ISO 560 (DIN 8542)

Hose 1 LW1	Hose 2 LW2	Dimensions [mm] L	i	D	Order No.
4	4	64	29,5	8	**113.00**
6	6	72	33,5	9	**113.01**
6	8	72	33,5	12	**113.02**
9	9	72	33,5	12	**113.03**
13	13	72	33,5	16	**113.04**

Technical data

Max. operating pressure (p_1)	40 bar (PN 40)
Operating temperature	-10 °C up to +90 °C
Mounting position / Direction of flow	any
Material	brass

ООО "ПРОВЕРТ" www.prowert.ru info@prowert.ru +7 (495) 103-05-38

Hose connections, detachable

Hose connections consist of a connector plug - allowing the hose to be slipped on and secured with a hose clap - and a threaded part, either male or female with a ball seal.

Detachable hose tails, complete

Consist of hose plug with ball seal and swivel nut with adaptor.

Connection W	Hose LW	Dimensions [mm] L	i/K	SW	Order No.
G 1/8	4	43	9/25	12	**197.06**
G 1/8	6	43	9/25	12	**197.07**
G 1/4	4	43	9/28	17	**197.01**
G 1/4	6	43	9/25	17	**197.02**
G 1/4	9	43	9/29	17	**197.03**
G 3/8	4	49	9/31	19	**198.01**
G 3/8	6	43	9/25	19	**198.02**
G 3/8	9	43	9/28	19	**198.03**
G 3/8	13	43	9/28	19	**198.04***
G 1/2	6	43	9/25	24	**198.02**
G 1/2	9	43	9/29	24	**198.03**
G 1/2	13	47	9/31	24	**198.04**

* union nut not removable

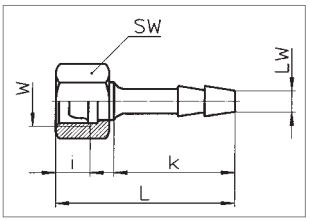

Parts for detachable hose tails

Connection W	Dimensions (mm) LW	L	i	SW	Order No.
Hose plug with ball seal					
G 1/8	4	25	15	-	**295-5**
G 1/8	6	25	15	-	**295-6**
G 1/4	4	43,5	28	-	**113-49**
G 1/4	6	37	25	-	**106-16**
G 1/4	9	37	25	-	**113-50**
G 3/8	4	47,5	31	-	**120-10a**
G 3/8	6	39	25	-	**113-38**
G 3/8	9	39	25	-	**113-39**
G 1/2	6	41	25	-	**113-47**
G 1/2	9	41	25	-	**113-48**
G 1/2	13	45	36	-	**113-45**
Hexagon nut					
G 1/8	-	10	8	12	**295-7**
G 1/4	-	14	11	17	**124-19**
G 3/8	-	16	13	19	**120-9**
G 3/8 LH	-	16	13	19	**124-18**
G 1/2	-	18	13	24	**147-12**

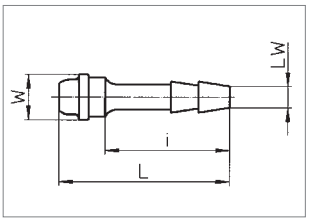

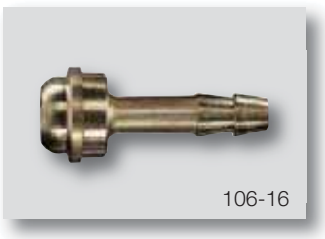

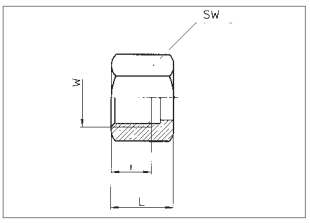

ООО "ПРОВЕЕТ" www.proweet.ru info@proweet.ru +7(495) 108-05-38

High speed connections

Push in Fittings made out of plastic an d brass (nickel plated). In connection with plastic (PU or PA) hoses applicable.

Straight screwing in links

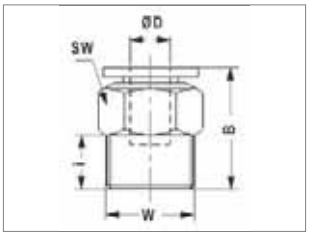

Connection W	Hose ø D	Dimensions (mm) B	i	SW	Order No.
With male thread					
G 1/8	4	19	6	10	**582.1104**
G 1/8	6	21	6	14	**582.1106**
G 1/8	8	26	6	14	**582.1108**
G 1/4	4	18	8	14	**582.1204**
G 1/4	6	23	8	14	**582.1206**
G 1/4	8	25	8	14	**582.1208**
G 1/4	10	31	8	17	**582.1210**
G 1/4	12	34	8	21	**582.1212**
G 3/8	6	21	9	17	**582.1306**
G 3/8	8	22	9	17	**582.1308**
G 3/8	10	28	9	17	**582.1310**
G 3/8	12	28	8	21	**582.1312**
G 1/2	6	25	11	21	**582.1406**
G 1/2	8	26	11	21	**582.1408**
G 1/2	10	26	11	21	**582.1410**
G 1/2	12	33	11	21	**582.1412**

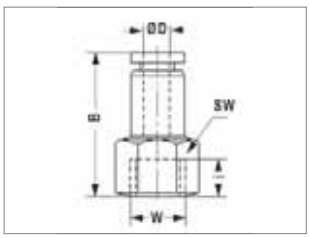

Connection W	Hose ø D	Dimensions (mm) B	i	SW	Order No.
With female thread					
G 1/8	4	23	8	10	**582.2104**
G 1/8	6	24	8	12	**582.2106**
G 1/8	8	26	8	14	**582.2108**
G 1/4	4	26	11	14	**582.2204**
G 1/4	6	27	11	14	**582.2206**
G 1/4	8	29	11	14	**582.2208**
G 1/4	10	32	11	17	**582.2210**
G 1/4	12	34	11	21	**582.2212**
G 3/8	6	28	12	17	**582.2306**
G 3/8	8	30	12	17	**582.2308**
G 3/8	10	33	12	17	**582.2310**
G 3/8	12	35	12	21	**582.2312**
G 1/2	6	30	14	21	**582.2406**
G 1/2	8	32	14	21	**582.2408**
G 1/2	10	35	14	21	**582.2410**
G 1/2	12	37	14	21	**582.2412**

Bulkhead unions

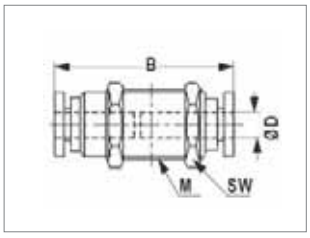

Connection M	Hose 2 x øD	Dimensions [mm] B	SW	Order No.
M12	4	30	14	**582.9304**
M14	6	32	17	**582.9306**
M16	8	35	19	**582.9308**
M20	10	42	24	**582.9310**
M22	12	45	27	**582.9312**

Technical data

Application:	compressed air, vacuum, neutral gases
Max. operating pressure (p_1):	10 bar
Recommended hose:	PU or PA (Nylon)*
Temperature range:	-20 °C up to +60 °C
Seal:	NBR
Connection:	cylindrical with incorporated O-Ring
Materials:	plastic, brass (nickel-plated), zinc

* see page 28

ООО "ПРОВЕРТ" www.prowert.ru info@prowert.ru +7 (495) 103-05-38

High speed connections

Y-Connections with male thread

Connection W	Hose ø D	Dimensions (mm) i	B	ød	SW	Order No.
G 1/8	4	6	42	3	10	582.6104
G 1/8	6	6	44	3	12	582.6106
G 1/8	8	6	47	3	14	582.6108
G 1/4	4	8	45	3	14	582.6204
G 1/4	6	8	46	3	14	582.6206
G 1/4	8	8	49	3	14	582.6208
G 1/4	10	8	58	4	17	582.6210
G 3/8	6	9	48	3	17	582.6306
G 3/8	8	9	51	3	17	582.6308
G 3/8	10	9	59	4	17	582.6310
G 1/2	6	11	51	3	21	582.6406
G 1/2	8	11	54	3	21	582.6408
G 1/2	10	11	63	4	21	582.6410

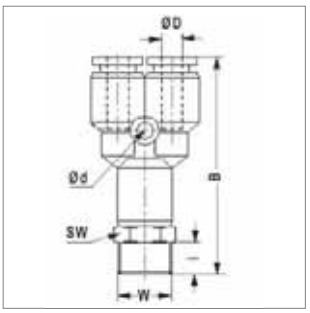

Screwing angles with male thread

Connection W	Hose ø D	Dimensions (mm) i	B	E	ød	SW	Order No.
G 1/8	4	6	24	17	-	10	582.3104
G 1/8	6	6	26	19	3	12	582.3106
G 1/8	8	6	30	23	3	14	582.3108
G 1/4	4	8	27	18	-	14	582.3204
G 1/4	6	8	28	19	3	14	582.3206
G 1/4	8	8	32	23	3	14	582.3208
G 1/4	10	8	36	28	4	17	582.3210
G 1/4	12	8	39	30	4	21	582.3212
G 3/8	6	9	30	19	3	17	582.3306
G 3/8	8	9	33	23	3	17	582.3308
G 3/8	10	9	37	28	4	17	582.3310
G 3/8	12	9	40	30	4	21	582.3312
G 1/2	6	11	33	19	3	21	582.3406
G 1/2	8	11	37	23	3	21	582.3408
G 1/2	10	11	41	28	4	21	582.3410
G 1/2	12	11	43	30	4	21	582.3412

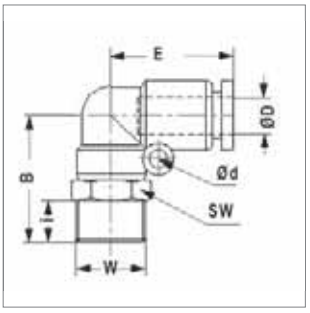

T-Angle connectors, with male/female thread, rotatable

Connection W	Hose ø D	Dimensions (mm) i	B	E	SW	Order No.
G 1/8	4	6	24	22	10	582.7104
G 1/8	6	6	24	23	10	582.7106
G 1/8	8	6	24	26	10	582.7108
G 1/4	6	8	26	25	14	582.7206
G 1/4	8	8	26	29	14	582.7208
G 1/4	10	8	26	32	14	582.7210
G 3/8	6	8	32	27	19	582.7306
G 3/8	8	8	32	30	19	582.7308
G 3/8	10	8	32	33	14	582.7310
G 3/8	12	8	32	36	14	582.7312
G 1/2	8	11	39	33	24	582.7408
G 1/2	10	11	39	36	19	582.7410
G 1/2	12	11	39	37	19	582.7412

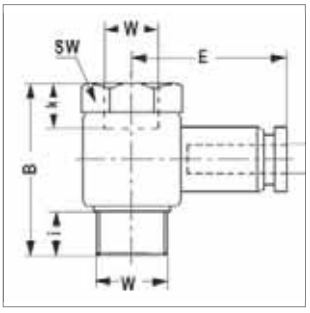

Distributor plug in connection with male thread

3 tails reduced

Connection W	Hoses ø 1x D1	1x D2	Dimensions (mm) A	B	E	ød	SW	Order No.
G 1/8	6	4	6	68	19	3	12	582.9851
G 1/4	8	4	8	71	20	2	14	582.9852
G 1/4	8	6	8	71	20	2	14	582.9853
G 3/8	10	8	9	92	24	4	17	582.9854

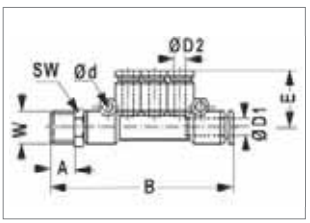

ООО "ПРОВЕЕТ" www.proweet.ru info@proweet.ru +7(495) 108-05-38

High speed connections

582.4206

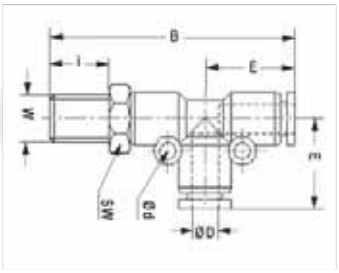

T-Screwing in screw connections

Connection W	Hose 2x ø D	Dimensions (mm) i	B	E	ød	SW	Order No.
With male thread on side							
G 1/8	4	6	25	19	3	10	**582.4104**
G 1/8	6	6	26	19	3	12	**582.4106**
G 1/8	8	6	29	23	3	14	**582.4108**
G 1/4	4	8	28	19	3	14	**582.4204**
G 1/4	6	8	28	19	3	14	**582.4206**
G 1/4	8	8	31	23	3	14	**582.4208**
G 1/4	10	8	37	28	4	17	**582.4210**
G 1/4	12	8	39	30	4	21	**582.4212**
G 3/8	6	9	30	19	3	17	**582.4306**
G 3/8	8	9	33	23	3	17	**582.4308**
G 3/8	10	9	38	28	4	17	**582.4310**
G 3/8	12	9	39	30	4	21	**582.4312**
G 1/2	6	11	34	19	3	21	**582.4406**
G 1/2	8	11	36	23	3	21	**582.4408**
G 1/2	10	11	41	28	4	21	**582.4410**
G 1/2	12	11	42	30	4	21	**582.4412**

582.5206

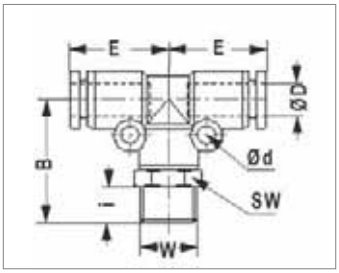

With male thread at the bottom

G 1/8	4	6	25	18	3	10	**582.5104**
G 1/8	6	6	26	19	3	12	**582.5106**
G 1/8	8	6	29	23	3	14	**582.5108**
G 1/4	4	8	28	18	3	14	**582.5204**
G 1/4	6	8	29	19	3	14	**582.5206**
G 1/4	8	8	31	23	3	14	**582.5208**
G 1/4	10	8	37	28	4	17	**582.5210**
G 1/4	12	8	38	30	4	21	**582.5212**
G 3/8	6	9	30	19	3	17	**582.5306**
G 3/8	8	9	33	23	3	17	**582.5308**
G 3/8	10	9	38	28	4	17	**582.5310**
G 3/8	12	9	40	30	4	21	**582.5312**
G 1/2	6	11	34	19	3	21	**582.5406**
G 1/2	8	11	36	23	3	21	**582.5408**
G 1/2	10	11	41	28	4	21	**582.5410**
G 1/2	12	11	42	30	4	21	**582.5412**

T-Connections

Standard version

Hose 3 x øD	Dimensions [mm] E	ø d	Order No.
4	18	3	**582.9204**
6	19	3	**582.9206**
8	23	3	**582.9208**
10	28	4	**582.9210**
12	30	4	**582.9212**

582.9204

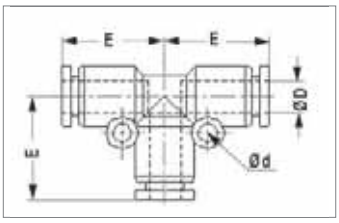

Reduced

Hoses ø D1	D2	Dimensions [mm] E	ø d	Order No.
6	4	19	3	**582.9811**
8	6	23	3	**582.9812**
10	8	28	4	**582.9813**
12	10	30	4	**582.9814**

582.9811

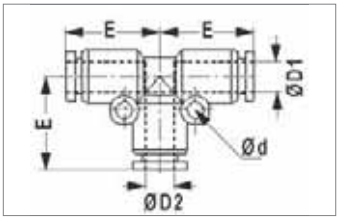

ООО "ПРОВЕРТ" www.prowert.ru info@prowert.ru +7 (495) 108-05-38

High speed connections

Straight connections

Standard version

Hose 2 x øD	Dimensions [mm] B	Order No.
4	33	582.9004
6	35	582.9006
8	39	582.9008
10	48	582.9010
12	49	582.9012

Reduced

Hoses ø D1	D2	Dimensions [mm] B	Order No.
6	4	35	582.9801
8	6	39	582.9802
10	8	47	582.9803
12	10	49	582.9804

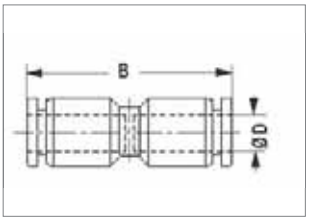

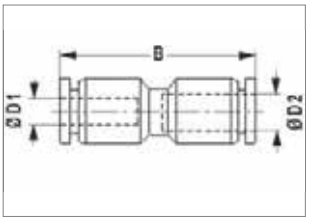

582.9004

Angle connections

Hose 2 x øD	Dimensions [mm] E	ø d	Order No.
4	18	-	582.9104
6	19	3	582.9106
8	23	3	582.9108
10	28	4	582.9110
12	30	4	582.9112

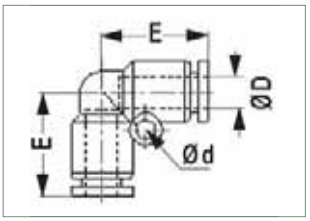

582.9104

Cross connections

Hose øD	Dimensions [mm] E	ø d	Order No.
4	18	3	582.9404
6	19	3	582.9406
8	23	3	582.9408
10	28	4	582.9410
12	30	4	582.9412

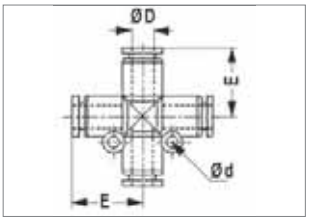

582.9404

Y-Connections

Standard version

Hose 3xøD	Dimensions [mm] B	ø d	Order No.
4	36	3	582.9504
6	37	3	582.9506
8	40	3	582.9508
10	50	4	582.9510
12	53	4	582.9512

Reduced

Hose ø D1	D2	Dimensions [mm] B	ø d	Order No.
6	4	37	3	582.9821
8	6	40	3	582.9822
10	8	49	3	582.9823
12	10	53	4	582.9824

With plug nipple

Hose 2+1øD	Dimensions [mm] B	ø d	Order No.
4	51	3	582.9604
6	55	3	582.9606
8	60	3	582.9608
10	73	4	582.9610
12	78	4	582.9612

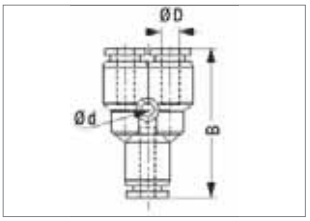

582.9504

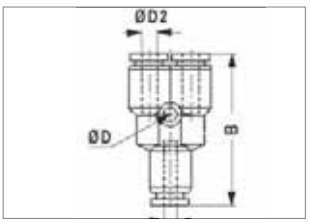

582.9821

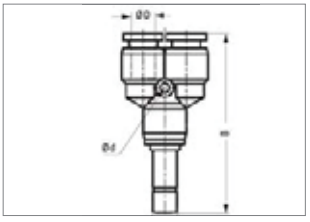

582.9604

ООО "ПРОВЕЕР" www.prower.ru info@prower.ru +7(495) 108-05-68

High speed connections

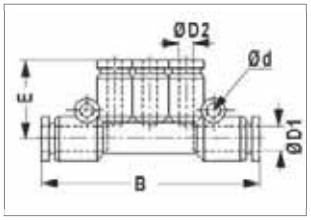

Distributor plug in

Connection for pipe

Hoses ø		Dimensions (mm)			Order No.
2xD1	3xD2	B	E	ød	
6	4	58	19	3	**582.9841**
8	4	63	20	3	**582.9842**
8	6	63	20	3	**582.9843**
10	6	77	24	4	**582.9844**
10	8	77	24	4	**582.9845**

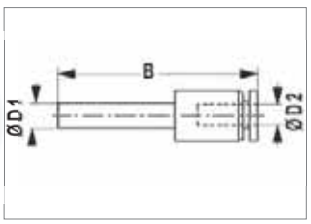

Straight plug

Reduced

Hoses ø		Dimensions [mm]	Order No.
D2	D1	B	
4	6	42	**582.9831**
4	8	44	**582.9832**
6	8	45	**582.9833**
6	10	47	**582.9834**
8	10	47	**582.9835**
6	12	54	**582.9836**
8	12	54	**582.9837**
10	12	55	**582.9838**

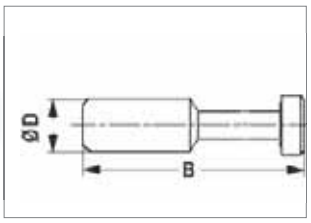

Catch plug

Hose øD	Dimensions [mm] B	Order No.
4	28	**582.9861**
6	33	**582.9862**
8	37	**582.9863**
10	42	**582.9864**
12	44	**582.9865**

Plastic hoses for high speed connections

Polyurethane (PU)

Polyurethane tubes are extremely flexible and very kink resistant with small bend for routing into tight places. The excellent memory tolerates repeated flexing. It is also very abrasion resistant and outlast other tubings. Good resistance against mineral oil, lubrication grease, oxygen, ozone and aliphatic hydrocarbons. The ideal choice for fluid power applications together with **High Speed Connections** (see pages 23 - 28). Blue.

Hose ø D x d	Max. operating pressure (p_1) bar	Order No.
4 x 2,5	11	**582.004**
6 x 4,0	11	**582.006**
8 x 5,5	11	**582.008**
10 x 6,5	11	**582.010**
12 x 8,0	11	**582.012**

Minimum tax: 10m (10m steps)

ООО "ПРОВЕРТ" www.prowert.ru info@prowert.ru +7 (495) 103-05-38

Rapid-action screw fittings for plastic hoses

Also “rapid connection of plastic hoses with connector threads”. The hose is pushed over the corresponding plug and clamped securely with the swivel nut. The swivel nut is knurled so that it can be tightened quickly and has a hexagon screw to secure the connection. Suitable for hoses with an inner diameter of 4, 6 and 8 mm. Connection threads G 1/8, G 1/4 and G 3/8. **Brass nickel-plated.**

GEV – Straight male screw-in connectors

Connection	Hose	Dimensions [mm]			Order No.
W	D x d	L	i	SW	
G 1/8	6 x 4	25	6	15	**401.112**
G 1/8	8 x 6	25	6	15	**401.113**
G 1/4	6 x 4	27	8	18	**401.122**
G 1/4	8 x 6	27	8	18	**401.123**
G 1/4	10 x 8	29	8	18	**401.124**
G 3/8	8 x 6	29	9	21	**401.133**
G 3/8	10 x 8	31	3	21	**401.134**

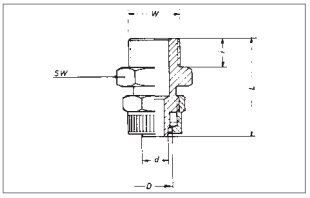

GAV – Straight female screw-on connectors

Connection	Hose	Dimensions [mm]			Order No.
W	D x d	L	i	SW	
G 1/4	6 x 4	28	8	17	**401.222**
G 1/4	8 x 6	28	8	17	**401.223**

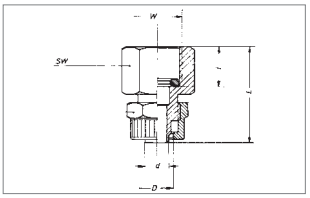

GLV – Bulkhead stuffing boxes (brass bright)

Blowpipe	Hose	Dimensions [mm]			Order No.
W	D x d	L	i	SW	
ø6	6 x 4	28	15	12	**401.302**
ø9	8 x 6	31	18	14	**401.303**

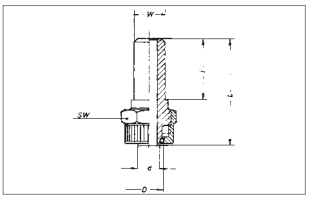

GSV – Bulkhead stuffing boxes

Connection	Hose	Dimensions [mm]			Order No.
W	D x d	L	i	SW	
M10x1	6 x 4	47	11	14	**401.402**
M12x1	8 x 6	48	13	16	**401.403**

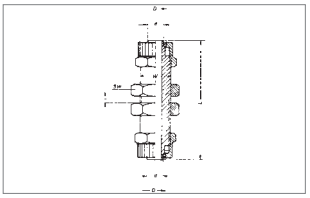

WEV – Swivel elbow connectors

Connection	Hose	Dimensions [mm]		Order No.
W	D x d	L	i	
G 1/8	6 x 4	25	9	**401.512**
G 1/8	8 x 6	25	9	**401.513**
G 1/4	6 x 4	25	11	**401.522**
G 1/4	8 x 6	25	11	**401.523**
G 1/4	10 x 8	30	11	**401.524**

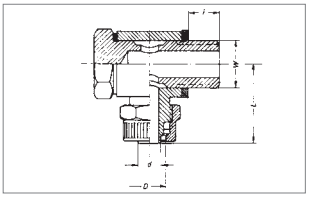

TEV – Swivel T-connectors

Connection	Hose	Dimensions [mm]		Order No.
W	D x d	L	i	
G 1/8	6 x 4	48	6	**401.612**
G 1/8	8 x 6	48	6	**401.613**
G 1/4	6 x 4	53	8	**401.622**
G 1/4	8 x 6	52	8	**401.623**
G 1/4	10 x 8	55	8	**401.624**

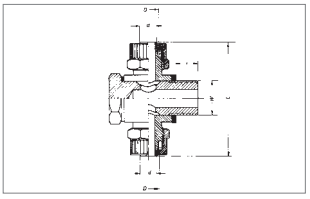

TV – T-Distributors

	Hose	Dimensions [mm]	Order No.
	D x d	L	
	6 x 4	44	**401.702**
	8 x 6	44	**401.703**

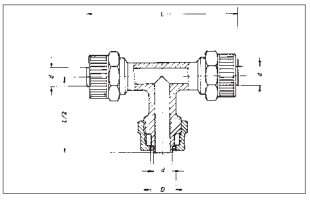

KV – 4-Way distributors

	Hose	Dimensions [mm]	Order No.
	D x d	L	
	6 x 4	42	**401.802**
	8 x 6	45	**401.803**

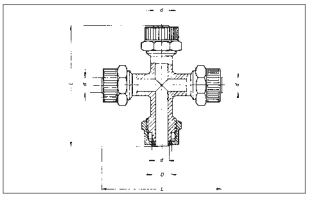

ООО "ПРОВЕЕТ" www.proweet.ru info@proweet.ru +7(495) 108-05-38

Rapid-action screw fittings for plastic hoses

401-40

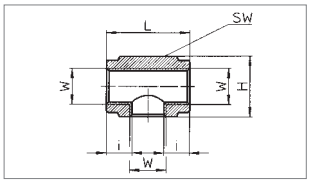

T-Distributors

Connection W	Dimensions (mm) L	H	i	SW	Order No.
G 1/8	23	-	6	17	**401-39**
G 1/4	30	22	8	22	**401-40**

401-42

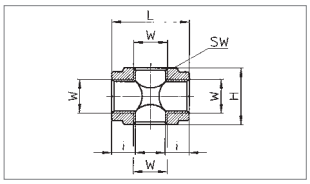

4-Way distributors

G 1/8	23	-	6	17	**401-41**
G 1/4	30	22	8	22	**401-42**

401-44

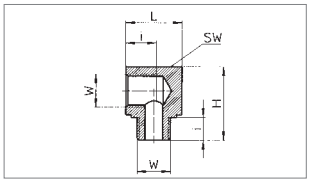

Screw-on distributor L

G 1/8	-	22	7	14	**401-43**
G 1/4	22	29	10	22	**401-44**

401-46

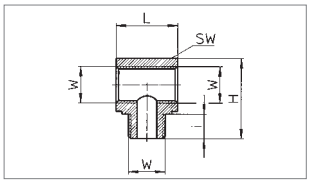

Screw-on distributor T

G 1/8	-	22	8	17	**401-45**
G 1/4	-	29	10	22	**401-46**

185-033

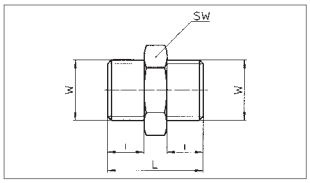

Double nipples

G 1/8	19	-	7	17	**185.029**
G 1/4	22	-	8,5	21	**185.033**

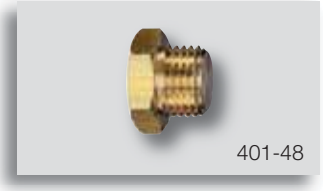
401-48

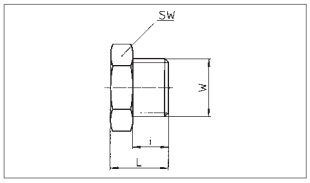

Screw plugs

G 1/8	11	-	6	14	**401-47**
G 1/4	13	-	8	17	**401-48**
G 3/8	14	-	8	19	**401-55**
G 1/2	16	-	10	24	**401-56**

401-1

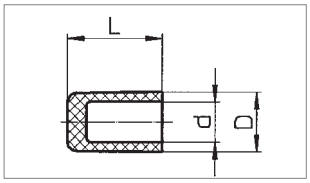

Plugs material PA11

Hose ø D x d	Dimensions [mm] i	Order No.
6 x 4	10	**401-1**
8 x 6	14	**401-2**
10 x 8	18	**401-3**

269-97 308-124

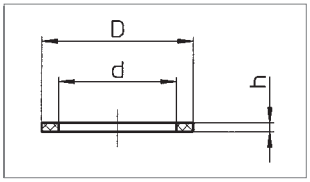

Sealing rings

Type	Connec-tion W	Dimensions [mm] D	d	h	Order No.
Sealing ring, PVC	G 1/8	28	8	17	**289-133**
Sealing ring, PVC	G 1/4	28	8	17	**269-97**
Undetachable sealing ring, PA	G 1/8				**320-35**
Undetachable sealing ring, PA	G 1/4				**308-124**
Undetachable sealing ring, PA	G 3/8				**308-125**
Undetachable sealing ring, PA	G 1/2				**320-37**

Technical data

Max. operating pressure (p_1)	40 bar (PN 40 bar)
Operating temperature	-10 °C up to +90 °C
Mounting position	any
Direction of flow	any
Material	brass

ООО "ПРОВЕРТ" www.prowert.ru info@prowert.ru +7 (495) 108-05-38

Compressed Air Accessories II

Hoses, valves, mufflers, gauges, accessories

Hoses	Spiral hoses	PA	**2**
		PU	**3**
	PVC hoses	PVC fabric hose with inlay 7 / PVC compressed air hose	**4**
		“SOFT” / hose buffer / Painting and air hose	**5**
	Rubber hose (blue stripes)		**6**
	Plastic hoses (PE, PA 11)		**6**
	Accessory for hoses	Hose break protection	**6**
		Runback hose reels, suspended power distributor,	**7**
		Garage-wall holders, strainers	**7**
Valves	Ball valves		**8 – 10**
	Shut-off and regulating valve		**11**
	Drain valve / air distributor		**12**
	Manual slide valve (3/2-way valve)		**13**
	Non-return valve		**14**
Safety Valves	DN 6 Component-tested safety valve		**15**
	DN 8 Component-tested safety valve		**16**
	DN 10 Component-tested safety valve		**17**
	DN 24, 32, 48 Component-tested safety valve		
	G 1 – G 2 High-performance safety valve		**18 – 19**
Blow-Off Valves	Classic DN 6 and mini DN 3 (without component test)		**20**
Mufflers	Muffler of sintered bronze		**21**
	Muffler of plastic, multi chamber muffler, safety muffler		**22**
Gauges	ø 40, 50, 63, 100, Safety pressure gauge, accessories for gauges		**23 – 25**
Accessories	Teflon tape, thread sealing yarn, compressed air special oil, compressor oil		**26**

ООО "ПРОВЕРТ" www.prowert.ru info@prowert.ru +7 (495) 108-05-38

Spiral hoses, polyamide (PA)

Spiral hoses with firmly attached threaded connections (twistable) at both ends. Some sizes available with coupling and plug (mounted). Resistant to reduction of inside diameter. With anti knik device. Blue.

Spiral hose -standard-, polyamide 11

Maximum working length approx. 80 % of the overall length.

Hose ø D x d	Overall length [mm]	Outside-ø [mm]	Connection thread	Order No.
With twistable threaded connection				
6 x 4	2,5	75	G 1/4	**580.221**
8 x 6	2,5	75	G 1/4	**580.321**
8 x 6	5,0	75	G 1/4	**580.322**
8 x 6	7,5	75	G 1/4	**580.323**
10 x 8	2,5	115	G 1/4	**580.521**
10 x 8	5,0	115	G 1/4	**580.522**
10 x 8	7,5	115	G 1/4	**580.523**
12 x 9	5,0	140	G 3/8	**580.432**
12 x 9	7,5	140	G 3/8	**580.433**
Ready mounted with coupling and plug DN7,2 (brass)				
8 x 6	5,0	75	-	**473.1**
8 x 6	7,5	75	-	**473.2**
12 x 9	5,0	140	-	**473.3**
12 x 9	7,5	140	-	**473.4**

Available upon request:
Spiral hose by the meter
without connections

Spiral hose, polyamide 12

Maximum working length approx. 60 % of the overall length.

Hose ø D x d	Overall length [mm]	Outside-ø [mm]	Connection thread	Order No.
With twistable threaded connection				
6 x 4	2,5	75	G 1/4	**580.241**
8 x 6	2,5	75	G 1/4	**580.341**
8 x 6	5,0	75	G 1/4	**580.342**
8 x 6	7,5	75	G 1/4	**580.343**
8 x 6	10	91	G 1/4	**580.344**
8 x 6	30	91	G 1/4	**580.345**
Ready mounted with coupling and plug DN7,2 (brass)				
6 x 4	2,5	62	-	**473.241**
8 x 6	2,5	91	-	**473.341**
8 x 6	5	91	-	**473.342**
8 x 6	7,5	91	-	**473.343**
8 x 6	10	91	-	**473.344**
8 x 6	30	91	-	**473.345**

Technical data

Max. operating pressure (p_1) at	+20 °C: 12 bar +40 °C: 10 bar +60 °C: 8 bar +80 °C: 6 bar
Operating temperature	-40 °C up to +100 °C

Rotating screw with bend protection spring

For spiral hoses.

Hose ø D x d	Connection thread	SW	Order No.
6 x 4	G 1/4	14	**474-1**
8 x 5	G 1/4	14	**474-2**
8 x 6	G 1/4	14	**474-3**
9,5 x 6,3	G 1/4	15,8	**474-4**
10 x 6,5	G 1/4	15,8	**474-5**
10 x 8	G 1/4	15,8	**474-6**
12 x 8	G 1/4	17	**474-7**

ООО "ПРОВЕРТ" www.prowert.ru info@prowert.ru +7 (495) 108-05-38

Spiral hoses, polyurethane (PU)

Spiral hoses with firmly attached threaded connections (twistable) at both ends. Some sizes available with coupling and plug (mounted). Resistant to reduction of inside diameter. Axial connections. With anti knik device. Extremely flexibel. Less rubbing off than polyamide hoses, soft surface less scratching-danger of sensitive surfaces. Blue.

Spiral hose -standard-, polyurethane

Maximum working length approx. 80 % of the overall length.

Hose ø D x d	Overall length [mm]	Outside-ø [mm]	Connection thread	Order No.
With twistable threaded connection				
8 x 5	3,0	40	G 1/4	**580.125**
8 x 5	6,0	40	G 1/4	**580.126**
8 x 5	7,5	40	G 1/4	**580.127**
9,5 x 6,3	3,5	60	G 1/4	**580.225**
9,5 x 6,3	6,0	60	G 1/4	**580.226**
9,5 x 6,3	7,5	60	G 1/4	**580.227**
12 x 8	3,5	80	G 3/8	**580.435**
12 x 8	6,0	80	G 3/8	**580.436**
12 x 8	7,5	80	G 3/8	**580.437**
Ready mounted with coupling and plug DN7,2 (brass)				
9,5 x 6,3	6,0	60	-	**473.5**
9,5 x 6,3	7,5	60	-	**473.6**
12 x 8	6,0	80	-	**473.7**
12 x 8	7,5	80	-	**473.8**

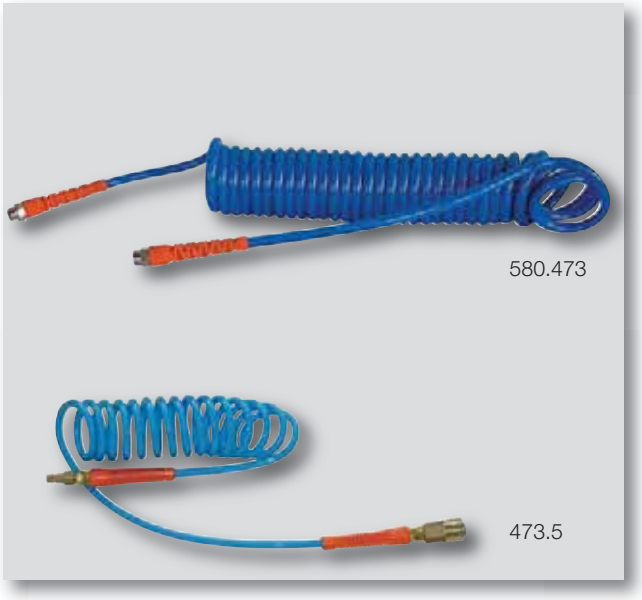

Spiral hose, polyurethane

Maximum working length approx. 60 % of the overall length.

Hose ø D x d	Overall length [mm]	Outside-ø [mm]	Connection thread	Order No.
With twistable threaded connection				
10x6,5	3,5	69	G 1/4	**580.245**
10x6,5	6	69	G 1/4	**580.246**
10x6,5	7,5	69	G 1/4	**580.247**
10x6,5	10	69	G 1/4	**580.248**
Ready mounted with coupling and plug DN7,2 (brass)				
10x6,5	3,5	69	-	**473.245**
10x6,5	6	69	-	**473.246**
10x6,5	7,5	69	-	**473.247**
10x6,5	10	69	-	**473.248**
Ready mounted with safety-coupling with push-button DN7,4 and plug (steel)				
10x6,5	3,5	69	-	**473.745**
10x6,5	6	69	-	**473.746**
10x6,5	7,5	69	-	**473.747**
10x6,5	10	69	-	**473.748**

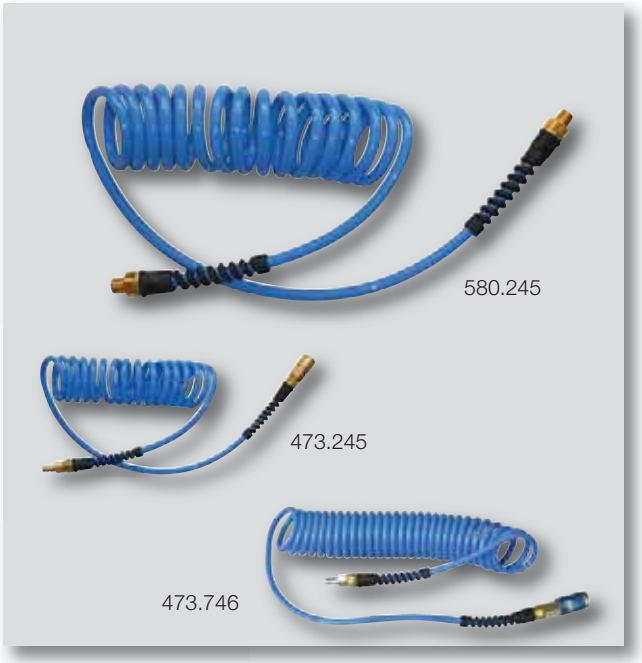

Technical data

Max. operating pressure (p_1)	at max. +50 °C – 8 bar
Operating temperature	-40 °C up to +85 °C

ООО "ПРОВЕРТ" www.prowert.ru info@prowert.ru +7 (495) 108-05-38

Plastic hoses, PVC

E40210

PVC fabric hose

PVC fabric hose with inlay, water-clear, conditionally oil-, gasoline- and base-resistant. Standard hose for a wide range of applications in industry, machine and plant construction, manual trades and laboratories. PVC hoses are resistant to pressure, UV and ageing with an unlimited storage life. If they are used with flowing oils, the softener contained in the PVC is removed, as a result the hose loses its UV resistance and gets brittle.

Inside-ø (DN) x Thickness [mm]	Pressure at 20 °C [bar]	Length [m]	Order No.
Whole roll, 50 m, without connections			
6 x 3	15	50	**E40013**
8 x 3	15	50	**E40021**
9 x 3	15	50	**E40014**
10 x 3	15	50	**E40027**
13 x 3,5	15	50	**E40015**
19 x 3,5	15	50	**E40019**
25 x 4,5	12	50	**E40020**
Ready mounted with coupling and plug DN7,2 (brass)			
6 x 3	15	5	**E40200**
		10	**E40201**
		15	**E40202**
		20	**E40203**
		25	**E40204**
		30	**E40205**
		35	**E40206**
		40	**E40207**
		45	**E40208**
		50	**E40209**
9 x 3	15	5	**E40210**
		10	**E40211**
		15	**E40212**
		20	**E40213**
		25	**E40214**
		30	**E40215**
		35	**E40216**
		40	**E40217**
		45	**E40218**
		50	**E40219**
13 x 3,5	15	5	**E40250**
		10	**E40251**
		15	**E40252**
		20	**E40253**
		25	**E40254**
		30	**E40255**
		35	**E40256**
		40	**E40257**
		45	**E40258**
		50	**E40259**

Technical data

Temperature range:	-15 °C up to +60 °C
Operating pressure at 20 °C:	see in table
Burst pressure:	approx. 60 bar
Soul / Pressure carrier / Cover:	PVC plain / polyester threads / PVC, cadmium and silicon free

PVC Hose for compressed air

Compressed air hose in extruded version. According to DIN 20018 for rough conditions of use. Resistant against water- and mineral oil-containing compressed air. Flexible, non-bending, abrasion resistant and weather-proof.

Inside-ø (DN) x Thickness [mm]	Pressure at 20 °C [bar]	Length [m]	Order No.
Whole roll, 50 m, without connections			
5 x 4,5	25	50	**502.31**
6 x 3	15	50	**502.32**
9 x 3	12	50	**502.33**
13 x 3,5	8	50	**502.34**

Technical data

Temperature range (compressed air / water):	-20 °C up to +70 °C / up to +90 °C
Burst pressure	> 40 bar
Soul	PVC, black, plain
Pressure carrier	coiled, synthetic textile strings
Cover	black, plane, abrasion-resistant and weather-proof

ООО "ПРОВЕРТ" www.prowert.ru info@prowert.ru +7 (495) 108-05-38

Plastic hoses, PVC

PVC Air hose “SOFT”

MOT-certifed according to TÜV PS PPP 53103 09.96

A 3-layer, dimensionally stable PVC hose with a cross tissue inlay made of high-quality polyester yarn in soft-technology. Suitable for process gases up to 15 bar and process liquids up to 20 bar. The hose is extremely high flexible, even at low temperatures. It has a low weight but a high pressure resistance. Resistant against UV rays, very robust, has a long durability and is oil and gasoline resistant. Color light blue. Industrial quality. **Ranges of application:** Compressed air industry, plant construction, garages, industry and everywhere where tools and machines are provided with compressed air.

Inside-ø (DN)x Thickness [mm]	Bending radius [mm]	Length [m]	Order No.
Whole roll, 50 m, without connections			
6,3 x 2,35	23	50	**E40410**
8,0 x 2,50	27	50	**E40411**
9,0 x 2,75	32	50	**E40412**
10,0 x 2,75	39	50	**E40413**
12,7 x 3,15	45	50	**E40414**
Ready mounted with coupling and plug DN 7,2 (steel)			
9,0 x 2,75	32	5	**E40710**
9,0 x 2,75	32	10	**E40711**
9,0 x 2,75	32	15	**E40712**
9,0 x 2,75	32	20	**E40713**
Ready mounted with DN 7,4 safety-coupling with push-button and plug (steel)			
9,0 x 2,75	32	5	**E40740**
9,0 x 2,75	32	10	**E40741**
9,0 x 2,75	32	15	**E40742**
9,0 x 2,75	32	20	**E40743**

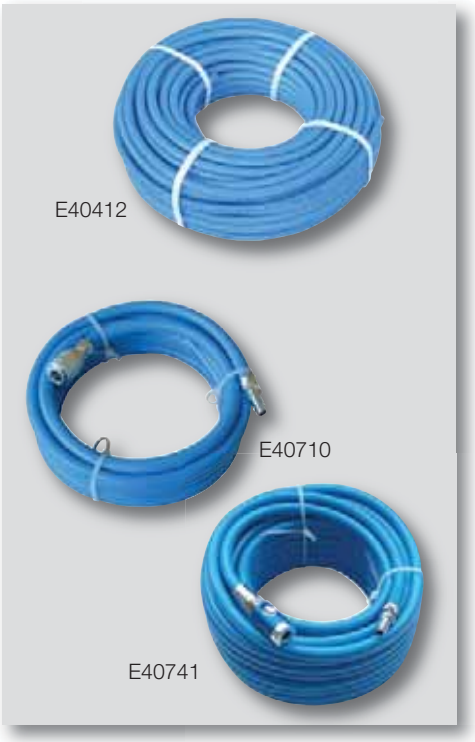

Technical data

Temperature range	-20 °C up to +60 °C
Max. operating pressure (p_1)	15/20 bar (compressed air /water)
Burst pressure	60 bar
Core material:	PVC, extra soft, black
Material fabric insert	polyester
Coat	PVC, extra soft, cadmium- and silicone-free
Reinforcement	high-strength synthetic yarn

Hose buffer

For direct connection to knocking air tools. Prevents premature wear of clutches and push nipples. Hose: PVC air hose “SOFT” LW9, flexible, oil and gasoline resistant, and UV resistant (see above). Length approx. 20 cm.

Connection inlet	Connection outlet	Max. pressure [bar]	Order No.
Coupling plug DN 7,2 (steel)	Threaded hose tail G 1/4 a (brass)	15	**E40702**

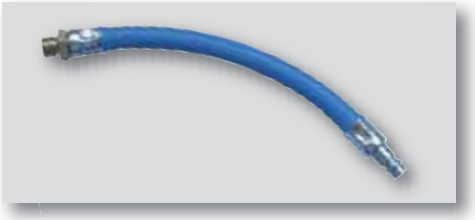

Painting and air hose

This hose is designed for extreme conditions and consists of three-layer thermoplastic. It is reinforced with a fabric insert in polyester fibers. The hose cover protects against oil, grease, paint and hydrocarbons. It also provides the ability to derive electrostatic voltages. **Silicone-free.** Typical applications include repair shops, paint shops, automotive, plastics processing, assembly plants and carpentry.

Inside-ø (DN) x Thickness [mm]	Pressure at 20 °C [bar]	Length [m]	Order No.
Whole roll, 40 m, without connections			
8 x 2,5	16	40	**E40502**
Ready mounted with coupling and plug DN 7,2 (brass)			
9 x 3,5	16	8	**E40500**
9 x 3,5	16	10	**E40510**
Ready mounted with DN 7,4 safety coupling with push-button and plug (steel)			
9 x 3,5	32	10	**E40520**

Technical data

Temperature range	-20 °C up to +90 °C
Burst pressure	64 bar
Soul	Antistatic flexible PVC inner core, soft PVC layer, polyester reinforcement
Cover	matt blue, oil resistant

ООО "ПРОВЕРТ" www.prowert.ru info@prowert.ru +7 (495) 108-05-38

Plastic hoses, soft-PVC, rubber, PE/PA

Rubber hose “blue stripes” for compressed air

The ideal workshop compressed air hose (ISO 2398, Cat 4B): Soul of SBR compound, resistant to weathering and oil-containing compressed air. Very flexible, smooth. Black/blue stripes. **Silicone-free.**

Inside-ø (DN) x Thickness [mm]	Pressure at 20 °C [bar]	Length [m]	Order No.
Whole roll, 40 m, without connections			
6 x 3,5	16	40	**E40401**
9,5 x 3,5	16	40	**E40402**
13 x 4	16	40	**E40403**
19 x 5	16	40	**E40404**
25 x 6	16	40	**E40405**
Ready mounted with DN 7,8 High flow coupling and plug (steel)			
9,5 x 3,5	16	5	**E40420-5**
9,5 x 3,5	16	10	**E40420-10**

Technical data

Temperature range	-25 °C up to +80 °C
Burst pressure	64 bar
Soul	SBR blend, flameproof fabric insert from PVAA
Cover	SBR / EPDM-blend, black / blue with labeling

Pneumatic hose, polyethylene/polyamide

Flexible hose, without reinforcement. Available in transparent polyethylene (PE) or nature-coloured polyamide (PA). Whole roll (50 m) without connections.

Inside-ø (DN) x Thickness [mm]	Pressure [bar] at 20 °C	40 °C	60 °C	Order No.
Polyethylene				
4 x 1	10	5	-	**E40350**
6 x 1	8	4	-	**E40351**
8 x 1	6	3	-	**E40353**
9 x 1,5	8	4	-	**E40352**
Polyamide				
4 x 1	27	18	15	**E40362**
6 x 1	19	13	11	**E40361**
8 x 1	12,5	9	7	**E40363**
9 x 1,5	16	11	9	**E40360**

Technical data

Max. operating pressures (p_1)	see table at: 20 °C, 40 °C, 60 °C
Temperature range	0 °C up to +80 °C (PE) / 0 °C up to +100 °C (PA 11)
Material (without reinforcement)	polyethylene/polyamide
Roll length	50 m

- Protects personnel and the environment from damage that can be the bursting of a compressed air system or entering hose
- Meets the EU standard EN983 - §5.3.4.3.2
- Operational and adjustable secured
- Building-in into any compressed air system

Available with **NPT thread** upon request!

Hose break protection - Hose Guard

Effective hose and pipe rupture valve for compressed air systems. Designed for normal amounts of air as is required for pneumatic tools. If a hose or pipe damage by one, interrupting flow to immediately stop the flow of a marginal residual flow. Remain undamaged parts of the compressed air network under full pressure to the affected segment or the tube can be safely replaced. After repair, the residual flow, the segment is filled slowly to work pressure levels. Once this is achieved, House Guard opens the line is back for normal operation.

Connection	Length [mm]	SW	Pre-Pressure	Order No.
Inlet: male thread, Outlet: female thread				
G 1/4	58	22	max. 18 bar	**396.032**
G 3/8	71	27	max. 18 bar	**396.033**
G 1/2	80	30	max. 18 bar	**396.034**
Intlet: female thread, Outlet: female thread				
G 1/4	48	22	max. 18 bar	**396.022**
G 3/8	59	27	max. 18 bar	**396.023**
G 1/2	65	30	max. 18 bar	**396.024**
G 3/4	76	33/36	max. 35 bar	**396.025**
G 1	100	41/50	max. 35 bar	**396.026**
G 2	130	70/80	max. 35 bar	**396.029**

Technical data

Operating temperature	G 1/4 - G 1/2: -20 °C up to +80 °C / G 3/4 - G 2: -20 °C up to +120 °C
Installation	before a coupling, after maintenance unit
Material - housing / seal (o-ring)	aluminum / NBR
- piston	G 1/4 - G 1/2 POM / G 3/4 - G 2 aluminium

Max. debit at 8 bar	396.032	396.033	396.034	396.022	396.023	396.024	396.025	396.026	396.029
l/min	700	1100	2600	700	1100	2600	4200	7000	20000

ООО "ПРОВЕРТ" www.prowert.ru info@prowert.ru +7 (495) 108-05-38

Accessories for plastic hoses

Hose reels

Automatic runback interlock clear and simple circuit. PU hose suitable for air and water. Resistant to 40 °C. Closed plastic housing (shock) inside and outside use. Pivotin braket made of steel for wall and ceiling mounting. The locking can be disengaged.

Hose Inside-ø (DN)	Hose length [m]	Pressure [bar]	Hose connection	Order No.
8	12	10	G 1/4	**477-36**
10	14+1	15	G 3/8	**477-38**

Technical data

Temperature range		-40 °C up to +80 °C (comp. air) / up to +40°C (water)
Operating pressure		10 bar **(477-36)** / 15 bar **(477-38)**
Dimensions LxBxH (mm)		360x330x210 **(477-36)** / 420x390x230 **(477-38)**
Weight (kg)		4,5 **(477-36)** / 5,9 **(477-38)**
Materials	- hose	PU with PE fabric, glossy, blue with bend protection spring
	- housing	plastic, blue
	- bracket	steel, swivel

Suspended Power distributor for electricity/compressed air

It provides with electricity and compressed air directly above the working area, thus no disturbing cables or hoses lie on the floor. With its innovative design it offers a wide range of connection possibilities for current and compressed air, despite its compact dimensions. Special feature: Temperature-control-system “DiagS”: The green and red lights indicate the function of the connected devices. In case of overheating it shuts down automatically .The suspended power distributor corresponds to protection class IP44, and thus it is splashproof. It is suitable for use in the industry and in workshops.
Dimensions: B x H x T: 227 x 305 x 212.

Variant	Order No.
- **6 earthed sockets with 250 V** - **2 connections for compressed air** (upt to 12 bar) each with a **safety coupling DN 7,4 with push button** - **Compressed air hose “Soft”** (9 x 2,75 mm), length 2 m, up to 15 bar (mounted) - Suspension by **zinc plated knotted chain** with karabiner hook, length 2 m	**E48200**
Features like above, but additionally with a - **3-phase AC current 5 pole socket (3 L + N + PE), 16 A / 400 V**	**E48210**

Garage wall holder

Light-alloy casting (in one peace cast). Extreme stable, solid construction and manufacture. Available in 3 sizes

Size	Dimensions [mm]						Order No.
	A	B	C	D	Eø	F	
I	188	147	70	150	6	78	**E42070**
II	266	201	108	225	6	107	**E42072**
III	348	257	144	170	8	136	**E42071**

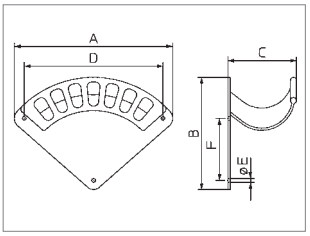

Strainers

For liquids, gases, steam, water, mineral oils, heating oils and hydraulic oils, fuels, and other non-aggressive media in liquid and gaseous states. Material tombac.

Thread	DN	C	L	SW1	SW2	Order No.
G 1/4	8	35	43,0	18,0	13	**397.022**
G 3/8	10	39	49,0	22,0	14	**397.023**
G 1/2	15	46	55,5	25,5	21	**397.024**
G 3/4	20	57	70,0	32,5	24	**397.025**
G 1	25	62	82,0	38,5	32	**397.026**
G 1 1/4	32	73	90,0	48,5	35	**397.027**
G 1 1/2	40	87	101,0	55,0	39	**397.028**
G 2	50	102	123,5	66,0	45	**397.029**

Technical data

Max. operating pressure (p_1)		10 bar
Max. operating temperature		110 °C
Pore width of sieve insert		0,2 mm
Material	- housing / headpiece	tombac
	- double sieve	stainless steel mesh for fine filtration 0,2 mm

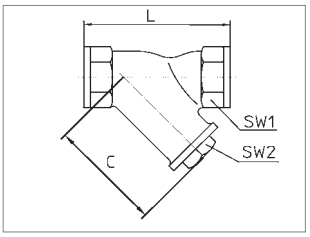

ООО "ПРОВЕРТ" www.prowert.ru info@prowert.ru +7 (495) 108-05-38

Mini ball valves

640.51

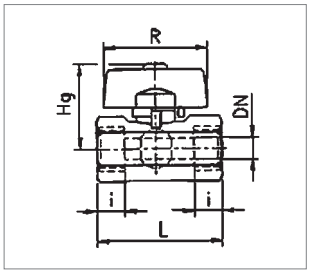

Mini ball valves

With full flow. Chromated brass.

Connection threads W	DN	Dimensions [mm] L	HG	R	i	Order No.
Female thread						
G 1/4	8	39	27	22	9	**640.51**
G 3/8	8	40	27	22	9	**640.52**
G 1/2	10	45	29	22	10,5	**640.53**
Female/male thread						
G 1/4	8	39	27	22	9	**640.55**
G 3/8	8	40	27	22	9	**640.56**
G 1/2	10	45	29	22	10,5	**640.57**
Male thread						
G 1/4	8	40,5	27	22	9	**640.60**
G 3/8	8	42,5	27	22	10	**640.61**
G 1/2	10	50	28,5	22	11	**640.62**

Technical data

Max. operating pressure (p_1)	10 bar (PN 10) (at medium temperature approx. room temperature)
Operating temperature	-20 °C up to +110 °C -20 °C up to +120 °C (640.60 - 62)
Permissible media	non-flammable and non-toxic gases and liquids
Mounting position	any
Direction of flow	any

640.55

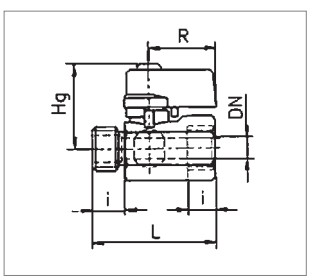

640.60

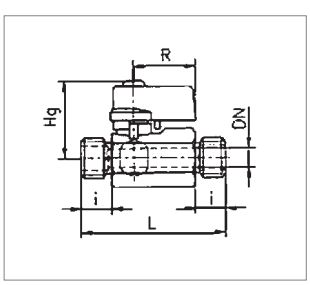

640.90

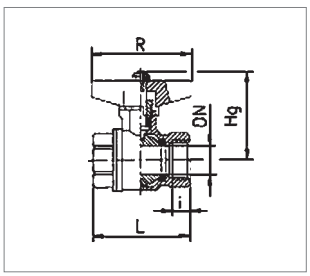

Mini ball valves

With metal toggle. With full flow. Chromated brass.

Connection threads W	DN	Dimensions [mm] L	HG	R	i	Order No.
Female thread						
G 1/4	10	42,0	46,0	50	10,0	**640.90**
G 3/8	10	47,0	46,0	50	12,0	**640.91**
G 1/2	15	53,0	51,5	50	13,5	**640.92**
G 3/4	20	60,5	54,5	50	14,5	**640.93**
G 1	25	65,0	61,5	50	14,0	**640.94**
Female/male thread						
G 1/4	10	43,0	46,0	50	10,0	**640.08**
G 3/8	10	57,0	46,0	50	12,0	**640.09**
G 1/2	15	56,5	51,5	50	13,5	**640.10**
G 3/4	20	64,0	54,5	50	14,5	**640.11**
G 1	25	70,0	61,5	65	14,0	**640.12**
Male thread						
G 3/8	10	56,0	46,0	50	11,5	**641.01**
G 1/2	15	53,5	51,5	50	10,0	**641.02**
G 3/4	20	59,5	54,5	50	12,0	**641.03**
G 1	25	69,0	61,5	65	13,0	**640.04**

Technical data

Max. operating pressure (p_1)	30 bar (PN 30) (at medium temperature approx. room temperature)
Operating temperature	-20 °C up to +130 °C
Permissible media	non-flammable and non-toxic gases and liquids
Mounting position	any
Direction of flow	any

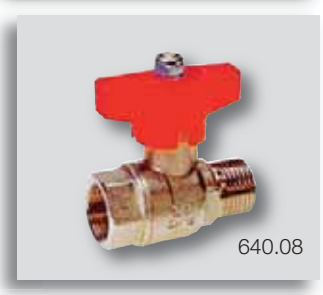
640.08

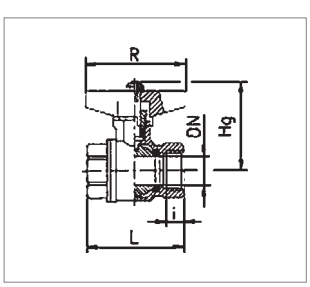

641.01

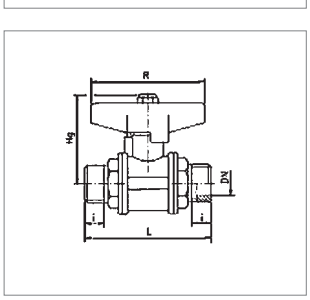

ООО "ПРОВЕРТ" www.prowert.ru info@prowert.ru +7 (495) 108-05-38

Ball valves

Ball valves

With metal toggle. With full flow. Chromated brass.

Connection threads W	DN	Dimensions [mm] NL	HG	R	i1/i2	SW	Order No.
Female thread							
G 1/4	10	42	46	85	10	23	**640.13**
G 3/8	10	57	46	85	12	23	**640.14**
G 1/2	15	57	52	85	13	30	**640.15**
G 3/4	20	64	55	85	14	37	**640.16**
G 1	25	64	62	85	14	45	**640.17**
G 1 1/4	32	70	73	100	15	55	**640.18**
G 1 1/2	40	89	79	140	16	68	**640.19**
G 2	50	103	92	140	17	84	**640.20**
Female / male thread							
G 1/4	10	43	46	85	10/11	23	**640.70**
G 3/8	10	57	46	85	12/11	23	**640.71**
G 1/2	15	53	52	85	13/10	30	**640.72**
G 3/4	20	57	55	85	14/12	37	**640.73**
G 1	25	64	62	140	14/13	45	**640.74**
G 1 1/4	32	86	73	140	15/14	55	**640.75**
G 1 1/2	40	97	79	140	16/15	68	**640.76**
G 2	50	114	92	140	17/17	84	**640.77**
Male thread							
G 3/8	10	56	46	85	11	23	**640.81**
G 1/2	15	54	52	85	10	30	**640.82**
G 3/4	20	60	55	85	12	37	**640.83**
G 1	25	69	62	113	13	45	**640.84**
G 1 1/4	32	84	73	141	14	55	**640.85**
G 1 1/2	40	97	79	141	15	68	**640.86**
G 2	50	114	92	141	17	84	**640.87**

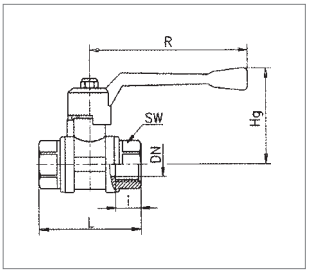

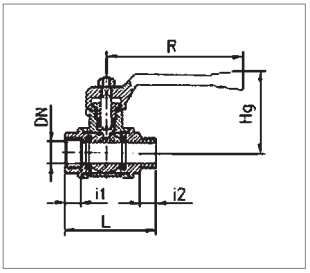

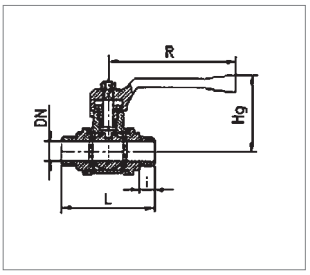

Technical data

Max. operating pressure (p_1)	30 bar (PN 30) (at medium temperature approx. room temperature)
Operating temperature	-20 °C up to +120 °C
Permissible media	non-flammable and non-toxic gases and liquids
Mounting position	any
Direction of flow	any

Stainless steel ball valves, refer to Chapter 7 “Compressed Air Preparation - Stainless Steel” on Page 9.

ООО "ПРОВЕРТ" www.prowert.ru info@prowert.ru +7 (495) 108-05-38

Compact ball valves

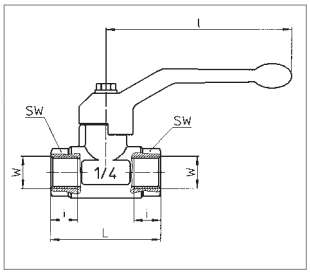

Compact ball valves

With metal toggle (steel). Straight-through opening same as port size. Material nickel-plated brass with a chromium-plated ball. Seals of Teflon (PTFE and NBR).

Connection threads W	DN	Dimensions [mm] L	i	SW	l	Order No.
Female thread						
G 1/4	8	44,4	10	25	80	**569.202**
G 3/8	10	44,4	10	25	80	**569.204**
G 1/2	15	50,5	12,5	31	80	**569.206**
G 3/4	20	57,5	13,5	37	113	**569.208**
G 1	25	70	15	38	113	**569.209**
G 1 1/4	32	80,5	16,5	47	138	**569.210**
G 1 1/2	40	94,5	17,5	54	138	**569.211**
G 2	50	112,5	20,5	66	158	**569.212**
Female / male thread						
G 1/4	8	54	10,5	25	80	**569.502**
G 3/8	10	54	10,5	25	80	**569.504**
G 1/2	15	58,5	11,5	31	80	**569.506**
G 3/4	20	66,5	13,5	37	113	**569.508**
G 1	25	78,5	14,5	38	113	**569.509**
G 1 1/4	32	91,5	17	47	138	**569.510**
G 1 1/2	40	105,5	19	54	138	**569.511**
G 2	50	122	21	66	158	**569.512**

Technical data

Max. operating pressure (p_1) (at medium temperature approx. room temperature)		G 1/4 - G 1/2: 50 bar G 3/4 - G 1: 40 bar G 1 1/4 - G 1 1/2: 30 bar G 2: 25 bar
Operating temperature		-40 °C up to +200 °C (seal PTFE)
Permissible media		Non-flammable and non-toxic gases and liquids
Mounting position		any
Direction of flow		any
Material	- ball seal	PTFE (Teflon)
	- spindle seal	viton
Marked with identification		according to AD info-sheet A4

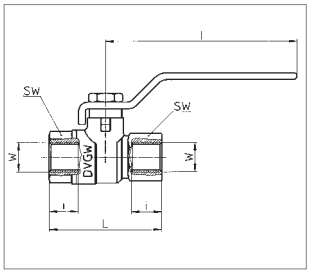

Compact ball valves with DVGW-Approval (EN 331)

With metal toggle (steel). Straight-through opening same as port size. Material nickel-plated brass with a chromium-plated ball. Seals of Teflon (PTFE and NBR).

Connection threads W	DN	Dimensions [mm] L	i	SW	l	Order No.
Female thread						
G 1/4	8	49	13	18	80	**574.202**
G 3/8	10	52	13	21	80	**574.204**
G 1/2	15	61	16	25	89	**574.206**
G 3/4	20	68	17	31	113	**574.208**
G 1	25	85	20	38	113	**574.209**
G 1 1/4	32	99	20	47	138	**574.210**
G 1 1/2	40	109	22	54	160	**574.211**
G 2	50	130	24	66	160	**574.212**
Female / male thread						
G 1/4	8	57	13	18	80	**574.502**
G 3/8	10	59	13	21	80	**574.504**
G 1/2	15	68	15	25	88	**574.506**
G 3/4	20	75	17	31	113	**574.508**
G 1	25	90	18	38	113	**574.509**
G 1 1/4	32	105	20	47	137	**574.510**
G 1 1/2	40	115	25	54	157	**574.511**
G 2	50	135	25	66	157	**574.512**

Technical data

Max. operating pressure (p_1)		5 bar (MOP5, PN 16 for compressed air)
Operating temperature		-10 °C up to +80 °C (seal PTFE)
Permissible media		flammable gases, exept acetylen and hydrogen
Mounting position		any
Direction of flow		any
Material	- ball seal	PTFE (Teflon)
	- spindle seal	viton
Marked with identification		according to DVGW

ООО "ПРОВЕРТ" www.prowert.ru info@prowert.ru +7 (495) 108-05-38

Shut-off and regulating valves

Shut-off valves

2-way valves with manual operation. The seal is carried out by a stainless steel ball. Spindle seal is made by an o-ring of perbunan.

Connection threads W	Dimensions [mm] DN	L	i	H	d	Order No.
Straight through type, with male thread						
G 1/8	3,5	35	7	30	22	**296.01**
G 1/4	3,5	34	8	30	22	**296.11**
G 1/4	6	43	10	50	48	**556.12**
G 3/8	10	52	12	50	48	**556.14**
G 1/2	10	64	14	54	48	**556.16**
Straight through type, with female thread						
G 1/4	6	43	11	50	48	**556.22**
G 3/8	9	52	12	50	48	**556.24**
G 1/2	11	63	15	57	48	**556.26**
elbow type, with male thread						
G 1/8	3,5	34	7	26	22	**295.01**
G 1/4	3,5	34	8	26	22	**295.11**

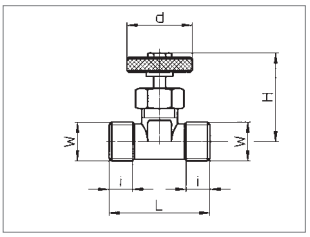

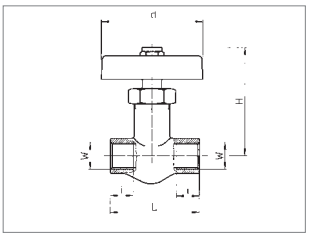

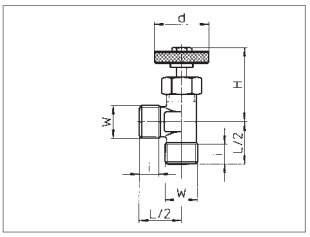

Needle regulating valves

Needle regulating valves seals by a brass-cone and thus allow a constant flow control between open and closed.

Connection threads W	Dimensions [mm] DN	L	i	H	d	Order No.
Straight through type, with male thread						
G 1/4	4	42	11	52	50	**558.12**
G 3/8	4	42	11	52	50	**558.14**
G 1/2	11	65	15	60	50	**558.16**
Straight through type, with female thread						
G 1/4	4	42	12	50	50	**558.22**
G 3/8	4	51	13	50	50	**558.24**
G 1/2	11	64	15	50	50	**558.26**

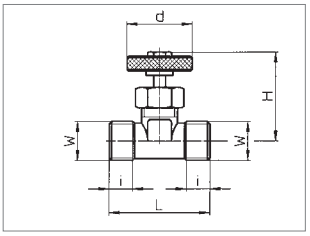

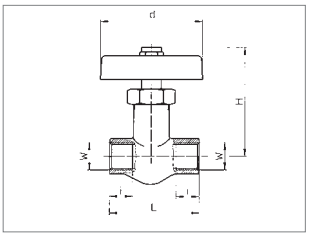

Technical data

Max. operating pressure	25 bar (PN 25) for DN 3,5 40 bar (PN 40) from DN 4
Operating temperature	-10 °C up to +90 °C
Permissible media	non-flammable and non-toxic gases, preferably air
Mounting position	any
Direction of flow	arrow
Material	brass
- handwheel (556.xx + 558.xx):	plastic

ООО "ПРОВЕРТ" www.prowert.ru info@prowert.ru +7 (495) 108-05-38

Drain valves, air distributions

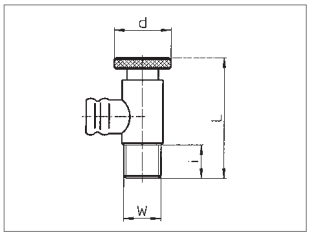

Drain valves

Drain valves of brass, straight or elbow-type, originally ser-ved to let out the condensation at the lowest point of compression tank. Today they are generally used for air exhaust. Soft seal (NBR) with handwheel, metal seal equipped with toggle.

Connection threads W	Dimensions [mm] DN	L	i	d	SW	Order No.
Elbow type, handwheel, with soft seal, brass						
G 1/8	5	43	9	20	-	**166.02**
G 1/4	5	43	12	20	-	**166.12**
Straight type, toggle, with metal seal, nickel-plated						
G 1/8	5	35	7	40	12	**212.01**
G 1/4	5	35	10	42	14	**168.11**

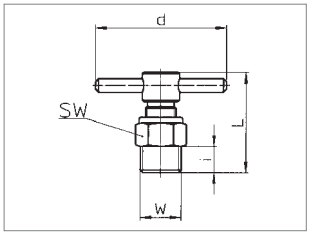

Technical data

Max. operating pressure (p_1):	25 bar (PN 25)
Operating temperature:	0 °C up to +90 °C
Mounting position:	any

Air distributors

Air distributors make it possible to have two or three taps that can be shut off individually. They are constructed either of hot-pressed brass with two outlets or of fittings that have two or three diaphragm shut-off valves. (See also air distri-butors with couplings).

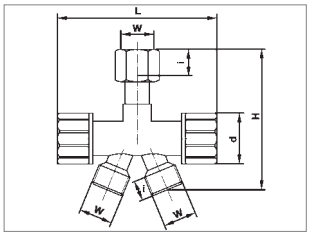

Connection threads W	Dimensions [mm] DN	L	i	H	d	Order No.
With hose tails						
G 1/4 LW6	6	79	9	110	25	**559.621**
G 3/8 LW6	6	79	9	110	25	**559.631**
Without hose tails						
G 1/4	6	79	9	65	25	**559.121**
G 3/8	6	79	9	65	25	**559.131**

Technical data

Max. operating pressure (p_1):	40 bar (PN 40)
Operating temperature:	-10 °C up to +90 °C
Mounting position:	any

ООО "ПРОВЕРТ" www.prowert.ru info@prowert.ru +7 (495) 108-05-38

Manual slide valves (3/2-way valves)

Manual slide valves are ideal fittings for equipment which, when turned off, must as a safety measure also be relieved; for example, putty-applicators, clamp-cylinders, nail-drivers, grinders, drills, screw drivers etc. When the compressed air pressure is escaped accidental operation cannot cause any injuries or damage. The manual slide valves can be connected to the compressed air system with 2/3 hose connectors or quick detachable connectors for plastic hoses. The couplings and fittings must be ordered separately, see Chapter 10.

Manual slide valves 3/2-way valves

3 ways 2 switch-positions operation by axial movement of the slide.
Protective device: The slide is elongated on the outer side in order to prevent the fingers from getting caught during operation.
Safe relieving of compressed air: Compressed air that escapes during exhaust is directed safely in axial direction.

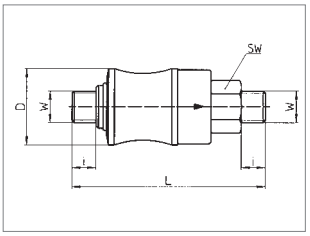

Connection threads W	Dimensions [mm] D	L	i	SW	Order No.
G 1/8	26	72	8	14	**321.11**
G 1/4	32	81	10	19	**321.12**
G 3/8	37	85	10	22	**321.14**
G 1/2	44	98	12	27	**321.16**

Technical data

Max. operating pressure (p_1):	12 bar
Min. Operating pressure (p_1):	1 bar
Operating temperature:	0 °C up to +90 °C
Mounting position:	any
Direction of flow:	arrow

Rates of flow (Nominal flow in Nl/min)**:**

Inlet pressure p_1 [bar]		2	4	6	8	10	12
321.11	G 1/8	450	750	1000	1700	1950	2267
321.12	G 1/4	1000	1667	2000	3333	4000	4667
321.14	G 3/8	1667	2667	4167	5167	6333	8167
321.16	G 1/2	2500	3833	5500	7000	8333	10000

ООО "ПРОВЕРТ" www.prowert.ru info@prowert.ru +7 (495) 108-05-38

Non-return valves

Non-return valves allow flow in one direction while shutting off the flow in the opposite direction. They have a soft seal (viton) and are available in straight or T-form.

Important: The straight type cannot be used for compressors!!

392.012

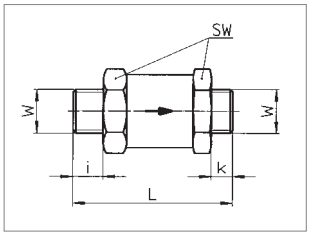

392.023

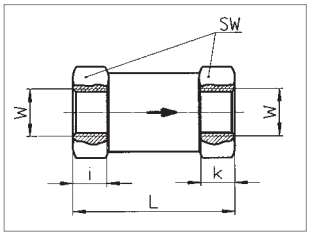

392.033

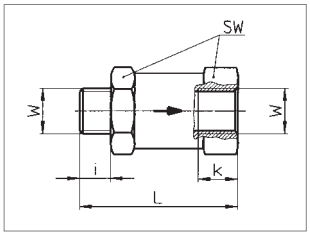

392.043

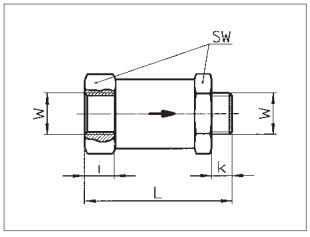

566.24

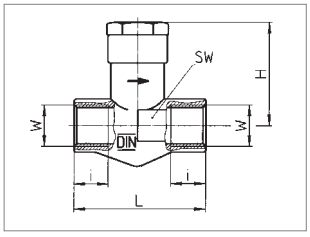

Non-return valves

Connection threads W	DN	Dimensions [mm] L	i	SW	K	Order No.
Straight type, male threads at both ends						
M5	2	30	5	10	5	**392.017**
G 1/4	8	49,5	6,5	22	9	**392.012**
G 3/8	8	53,5	11	22	11	**392.013**
G 1/2	12	70	13	27	13	**392.014**
G 3/4	16	77	14	36	14	**392.015**
G 1	22	84	15	46	15	**392.016**
Straight type, female threads at both ends						
M5	2	30	4,5	10	4,5	**392.027**
G 1/4	8	45	9,5	22	11,5	**392.022**
G 3/8	8	47	10	22	11	**392.023**
G 1/2	12	57	11	27	13	**392.024**
G 3/4	16	58	14	36	13	**392.025**
G 1	22	68	14	46	16	**392.026**
Straight type, inlet: male thread – outlet: female thread						
G 1/4	8	48,5	6,5	22	11,5	**392.032**
G 3/8	8	53,5	11	22	11	**392.033**
G 1/2	12	69	13	27	13	**392.034**
G 3/4	16	72	14	36	13	**392.035**
G 1	22	81	15	46	16	**392.036**
Straight type, inlet: female thread – outlet: male thread						
G 1/4	8	46	6,5	22	9	**392.042**
G 3/8	8	47	10	22	11	**392.043**
G 1/2	12	58	11	27	13	**392.044**
G 3/4	16	63	14	36	14	**392.045**
G 1	22	69	14	46	15	**392.046**
T-form, female threads at both ends						
G 1/4	6	42	11	17	33	**566.22**
G 3/8	7,5	48	12	22	33	**566.24**
G 1/2	10	64	15	27	36	**566.26**

Technical data

Max. operating pressure (p_1):		16 bar
Opening pressure:	-straight type	~0,1 bar
	-T-form	0,5 up to 0,8 bar
Operating temperature:		-10 °C up to +180 °C
Mounting position:		any
Direction of flow:		arrow
Material:		brass, viton

Rates of flow

Nominal rates of flow in Nl/min at p_1 = 6 bar and Δp = 1 bar

Ex. straight type:

Threads	Nominal flow
G 1/4 und G 3/8	917 Nl/min
G 1/2	1667 Nl/min
G 3/4	3167 Nl/min
G 1	5667 Nl/min

ООО "ПРОВЕРТ" www.prowert.ru info@prowert.ru +7 (495) 108-05-38

Component-tested safety valves DN6

Safety valves serve to blow out non-poisonous and non flammable gases into the atmosphere in order to protect pressure tanks against overpressure.
Please note: Only safety valves that have been set and sealed by us can be delivered with the component symbols, it is thus absolutely necessary to indicate the setting pressure in bar. As functional test, safety valves may be aerated by the way of pulling the haul-off bolt. Repairs may only be carried out by the manufacturer.

Connection threads W	Dimensions [mm] L	i	SW	do	Set pressure [bar]	Order No.
G 1/4	65	10	17	6	4,5 - 7,0	**469.23**
					7,0 - 10,0	**469.24**
					10,0 - 13,0	**469.25**
					13,0 - 18,0	**469.26**
					18,0 - 24,0	**469.27**
G 3/8	65	10	19	6	4,5 - 7,0	**469.33**
					7,0 - 10,0	**469.34**
					10,0 - 13,0	**469.35**
					13,0 - 18,0	**469.36**
					18,0 - 24,0	**469.37**

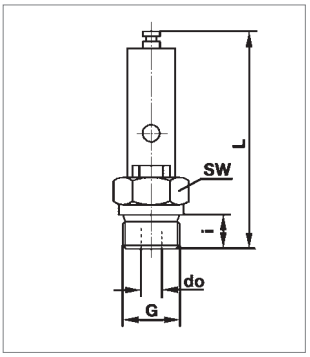

Technical data

Connection thread	G 1/4, G 3/8
Operating temperature	-10 °C up to +150 °C
Setting range	4,5 up to 24 bar (5 steps)
Opening pressure difference	< 10 %
Closing pressure difference	< 10 %
Built-in position	vertical
Material	brass
Seal	FKM (viton)
Locking torque (valve installation)	13 Nm

Important: The supply connection to the safety valve should not be < DN6, the pressure drop in the supply connection not > 3 %.

Definitions

Set pressure (start-to-leak):	beginning of *audible* leaking
Opening pressure:	valve completely open, max. blow-off / deflation
Closing pressure:	valve is closed and sealed (tight)
Opening pressure difference:	difference between start-to-leak pressure and openning pressure
Closing pressure difference:	difference between start-to-leak pressure and closing pressure

For example:	set pressure	12,0 bar
	opening pressure (+10 %)	13,2 bar
	closing pressure (-10 %)	10,8 bar

Exhaust capacity air

The exhaust capacities indicated in the table are the minimum values reached when air pressure is raised by 10 % above the set pressure.

Set pressure	Exhaust flow capacity (normal conditioning)	
[bar]	[m³/h]	[l/min]
6	45,5	763
10	92	1540
11	100	1681
14	126	2104
16	143	2387
18	160	2696
20	177	2551
22	194	3234
24	211	3516

Intermediate values can be interpolated.

Locking torques

Connection threads	Max. locking torques
G 1/4	15 Nm
G 3/8	25 Nm

Component symbols

CE0685 SV 02 3 6 D/G 0,4 P

- P — pressure setting (bar)
- 0,4 — flow factor
- D/G — suitable for gases and vapors
- 6 — narrowest flow diameter (mm)
- 3 — component number
- 02 — year of approval
- SV — safety valve
- CE0685 — German technical inspection in this case: DEKRA

ООО "ПРОВЕРТ" www.prowert.ru info@prowert.ru +7 (495) 108-05-38

Component-tested safety valves DN8

Safety valves serve to blow out non-poisonous and non-flammable gases into the atmosphere in order to protect pressure tanks against overpressure.
Please note: Only safety valves that have been set and sealed with lead (plumbed) by us can be delivered with the component symbols, it is thus absolutely necessary to indicate the setting pressure in bar. To test their proper functioning, safety valves can be relieved by turning the knurled (thumb) screw to the left. The bearing surfaces and conical seals can be cleaned of impurities by unscrewing the entire upper part - **without** changing the pressure setting. Repairs may only be carried out by the manufacturer.

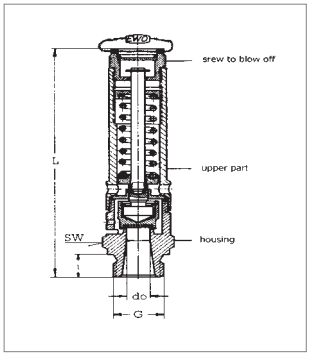

Connection threads W	Dimensions [mm] L	i	SW	do	Set pressure [bar]	Order No.
G 1/4	85	10	20	8	1,0 - 1,5	**351.221**
G 1/4	85	10	20	8	1,5 - 2,0	**351.222**
G 1/4	85	10	20	8	2,0 - 3,0	**351.223**
G 1/4	85	10	20	8	3,0 - 5,0	**351.224**
G 1/4	85	10	20	8	5,0 - 7,0	**351.225**
G 1/4	85	10	20	8	7,0 - 9,0	**351.226**
G 1/4	85	10	20	8	9,0 - 15,0	**351.227**
G 1/4	90	10	20	8	15,0 - 20,0	**351.421**
G 1/4	90	10	20	8	20,0 - 27,0	**351.422**
G 1/4	90	10	20	8	27,0 - 40,0	**351.423**
G 3/8	85	10	20	8	1,0 - 1,5	**351.241**
G 3/8	85	10	20	8	1,5 - 2,0	**351.242**
G 3/8	85	10	20	8	2,0 - 3,0	**351.243**
G 3/8	85	10	20	8	3,0 - 5,0	**351.244**
G 3/8	85	10	20	8	5,0 - 7,0	**351.245**
G 3/8	85	10	20	8	7,0 - 9,0	**351.246**
G 3/8	85	10	20	8	9,0 - 15,0	**351.247**
G 3/8	90	10	20	8	15,0 - 20,0	**351.441**
G 3/8	90	10	20	8	20,0 - 27,0	**351.442**
G 3/8	90	10	20	8	27,0 - 40,0	**351.443**
G 1/2	87	12	24	8	1,0 - 1,5	**351.251**
G 1/2	87	12	24	8	1,5 - 2,0	**351.252**
G 1/2	87	12	24	8	2,0 - 3,0	**351.253**
G 1/2	87	12	24	8	3,0 - 5,0	**351.254**
G 1/2	87	12	24	8	5,0 - 7,0	**351.255**
G 1/2	87	12	24	8	7,0 - 9,0	**351.256**
G 1/2	87	12	24	8	9,0 - 15,0	**351.257**
G 1/2	92	12	24	8	15,0 - 20,0	**351.451**
G 1/2	92	12	24	8	20,0 - 27,0	**351.452**
G 1/2	92	12	24	8	27,0 - 40,0	**351.453**

Exhaust capacity air

The exhaust capacities indicated in the table are the minimum values reached when air pressure is raised by 10% above the set pressure.

Set pressure	Exhaust flow capacity (normal conditioning)	
[bar]	[m³/h]	[l/min]
1	23,5	394
2	35,5	592
4	59	985
6	63	1380
8	106	1773
10	130	2168
12	154	2562
14	177	2957
16	201	3350
18	225	3745
20	248	4138
22	272	4533
25	307	5124
30	367	6110
35	426	7095
40	485	8080

Intermediate values can be interpolated.

Locking torques

Connection threads	Max. locking torques
G 1/4	15 Nm
G 3/8	25 Nm
G 1/2	35 Nm

Technical data

Connection thread	G 1/4, G 3/8, G 1/2
Operating temperature	-10 °C up to +180 °C
Setting range	1 up to 40 bar (10 steps)
Opening pressure difference	< 10 %
Closing pressure difference	< 10 % (under 3 bar ≤ 0,3 bar)
Built-in position	vertical
Material	brass
Seal	FKM (viton)
Leading	aluminum
Locking torque (valve installation)	13 Nm

Important: The supply connection to the safety valve should not be < DN6, the pressure drop in the supply connection not > 3%.

Definitions

Set pressure (start-to-leak):	beginning of *audible* leaking
Opening pressure:	valve completely open, max. blow-off/deflation
Closing pressure:	valve is closed and sealed (tight)
Opening pressure difference:	difference between start-to-leak pressure and openning pressure
Closing pressure difference:	difference between start-to-leak pressure and closing pressure

For example:	set pressure	12,0 bar
	opening pressure (+10%)	13,2 bar
	closing pressure (-10%)	10,8 bar

Component symbols

CE0685 SV 02 2 8 D/G 0,32 P

- P — pressure setting (bar)
- 0,32 — flow factor
- D/G — suitable for gases and vapors
- 8 — narrowest flow diameter (mm)
- 2 — component number
- 02 — year of approval
- SV — safety valve
- CE0685 — German technical inspection
  in this case: DEKRA

ООО "ПРОВЕРТ" www.prowert.ru info@prowert.ru +7 (495) 108-05-38

Component-tested safety valves DN 10

Safety valves serve to blow out non-poisonous and non-flammable gases into the atmosphere in order to protect pressure tanks against overpressure.
Please note: Only safety valves that have been set and sealed with lead (plumbed) by us can be delivered with the component symbols, it is thus absolutely necessary to indicate the setting pressure in bar. To test their proper functioning, safety valves can be relieved by turning the knurled (thumb) screw to the left. The bearing surfaces and conical seals can be cleaned of impurities by unscrewing the entire upper part - **without** changing the pressure setting. Repairs may only be carried out by the manufacturer.

Connection threads W	Dimensions [mm] L	i	SW	do	Set pressure [bar]	Order No.
G 1/2	120	12	27	10	2,0 - 3,6	**351.261**
					3,6 - 5,0	**351.262**
					5,0 - 7,0	**351.263**
					7,0 - 8,5	**351.264**
					8,5 - 11,5	**351.265**
					11,5 - 16,0	**351.266**
					16,0 - 22,0	**351.267**
G 3/4	120	12	30	10	2,0 - 3,6	**351.271**
					3,6 - 5,0	**351.272**
					5,0 - 7,0	**351.273**
					7,0 - 8,5	**351.274**
					8,5 - 11,5	**351.275**
					11,5 - 16,0	**351.276**
					16,0 - 22,0	**351.277**

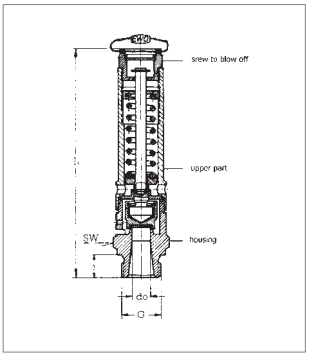

Technical data

Connection thread	G 1/2, G 3/4
Operating temperature	-10 °C up to +180 °C
Setting range	2 up to 22 bar (7 steps)
Opening pressure difference	< 10 %
Closing pressure difference	< 10 % (under 3 bar ≤ 0,3 bar)
Built-in position	vertical
Material	brass
Seal	FKM (viton)
Leading	aluminum
Locking torque (valve installation)	13 Nm

Important: The supply connection to the safety valve should not be < DN 6, the pressure drop in the supply connection not > 3 %.

Definitions

Set pressure (start-to-leak): beginning of *audible* leaking
Opening pressure: valve completely open, max. blow-off / deflation
Closing pressure: valve is closed and sealed (tight)
Opening pressure difference: difference between start-to-leak pressure and openning pressure
Closing pressure difference: difference between start-to-leak pressure and closing pressure

For example:

set pressure	12,0 bar
opening pressure (+10 %)	13,2 bar
closing pressure (-10 %)	10,8 bar

Component symbols

CE0685 SV 02 1 10 D/G 0,43 P

- P: pressure setting (bar)
- 0,43: flow factor
- D/G: suitable for gases and vapors
- 10: narrowest flow diameter (mm)
- 1: component number
- 02: year of approval
- SV: safety valve
- CE0685: German technical inspection, in this case: DEKRA

Exhaust capacity air

The exhaust capacities indicated in the table are the minimum values reached when air pressure is raised by 10 % above the set pressure.

Set pressure [bar]	Exhaust flow capacity (normal conditioning) [m³/h]	[l/min]
2	74,5	1242
4	124	2068
6	174	2895
8	223	3722
10	273	4548
12	323	5377
14	372	6203
16	422	7032
18	471	7858
20	521	8685
22	571	9513

Intermediate values can be interpolated.

Locking torques

Connection threads	Max. locking torques
G 1/2	35 Nm
G 3/4	50 Nm

ООО "ПРОВЕРТ" www.prowert.ru info@prowert.ru +7 (495) 108-05-38

Component-tested high-performance safety valves G1 – G2

Safety valve with a very high blow-off capacity will be used for protection of pressure vessels and pressure systems for air and other neutral, non-toxic and non-combustible gases. The valves only can be supplied with a preset pressure, the desired set pressure must be specified with the order. After setting, the valves are labeled and sealed. For functional testing, the safety valve can be opened by turning the knurled screw. The bearing surfaces and seals can be cleaned from impurities by unscrewing the upper part **without** changing the pressure setting. Repairs may only be executed by the manufacturer.

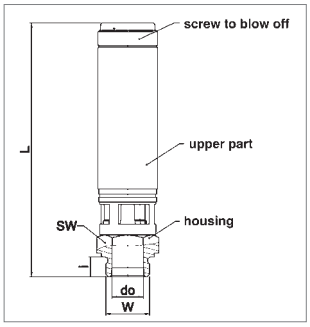

Safety valves D/G

This spring-loaded safety valve with a very high blow-off capacity will be used for protection of pressure vessels and pressure systems for air and other neutral, non-toxic and non-combustible gases.

Connection threads W	Dimensions [mm] L	i	SW	do	Set pressure [bar]	Order No.
G1	177	15	41	24	0,2 - 35	**352.00**
G1 1/4	215	22,5	60	32	0,2 - 30	**352.10**
G1 1/2	215	22,5	60	32	0,2 - 30	**352.20**
G2	282	26	80	48	0,2 - 30	**352.30**

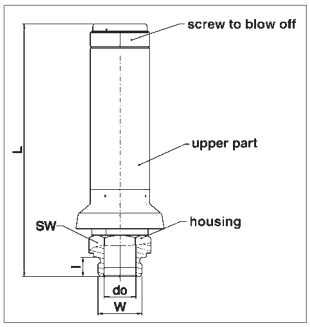

Safety valves F/K/S

This valves have a protective cover (stainless steel) and the spring area of the medium is separately. This design allows a usage to secure fixed pressure and vehicle tanks from dust and granular goods.

Connection threads W	Dimensions [mm] L	i	SW	do	Set pressure [bar]	Order No.
G1	177	15	41	24	0,2 - 6	**352.40**
G1 1/4	215	22,5	60	32	0,2 - 6	**352.50**
G1 1/2	215	22,5	60	32	0,2 - 6	**352.60**
G2	282	26	80	48	0,2 - 6	**352.70**

Options
Stainless steel - and
NBR or PTFE seals on request!

Locking torques

Connection threads	Max. locking torques
G1	60 Nm
G1 1/4	80 Nm
G1 1/2	80 Nm
G2	80 Nm

Technical data

Connection thread		G1, G1 1/4, G1 1/2, G2
Operating temperature		+200 °C
Setting range	- model D/G	0,2 up to 30 (35) bar
	- model F/K/S	0,2 up to 6 bar
Opening pressure difference		< 10 %
Closing pressure difference		< 10 %
Built-in position		vertical, standing
Material	- housing, top, internal parts	brass (stainless steel on request!)
	- seal	FKM (viton) (NBR or PTFE on request!)
	- spring, guard	stainless steel

Definitions

Set pressure (start-to-leak):	beginning of *audible* leaking
Opening pressure:	valve completely open, max. blow-off/deflation
Closing pressure:	valve is closed and sealed (tight)
Opening pressure difference:	difference between start-to-leak pressure and openning pressure
Closing pressure difference:	difference between start-to-leak pressure and closing pressure

Component symbols

TÜV – SV – 05 – 2003 – DN – D/G – 0,xx – p
F/K/S

- pressure setting (bar)
- flow factor
- suitable for *
- narowest flow diameter (mm)
- test number
- year of approval
- safety valve
- German surveillance: TÜV

* D/G - for gases and vapors
F/K/S - for blowing air from tanks for liquid, granular or dust media

TÜV – Component certification: 2003

Power table see next side

ООО "ПРОВЕРТ" www.prowert.ru info@prowert.ru +7 (495) 108-05-38

Exhaust capacity air [Nm³/h]

At max. pressure exceeding 10 % these values are achieved.

Model D / G

Set pressure [bar]	Exhaust flow capacity [m³/h] G1	G1 1/4	G1 1/2	G2
0,2	225	376	376	721
0,3	258	430	430	786
0,4	284	473	473	851
0,5	310	517	517	916
0,6	337	563	563	981
0,7	371	618	618	1046
0,8	399	666	666	1111
0,9	429	715	715	1175
1,0	459	766	766	1370
1,5	604	1007	1007	1827
2,0	749	1249	1249	2325
3,0	1032	1723	1723	3177
4,0	1330	2219	2219	4056
5,0	1601	2671	2671	4962
6,0	1872	3123	3123	5802
7,0	2143	3575	3575	6642
8,0	2413	4027	4027	6034
9,0	2684	4478	4478	6711
10,0	2955	4930	4930	7388
11,0	3226	5382	5382	8066
12,0	3497	5834	5834	8742
13,0	3768	6286	6286	9420
14,0	4039	6738	6738	10097
15,0	4310	7190	7190	10774
16,0	4581	7642	7642	11451
17,0	4851	8094	8094	12128
18,0	5122	8546	8546	12806
19,0	5393	8998	8998	13483
20,0	5664	9450	9450	14160
21,0	5935	9902	9902	14838
22,0	6206	10354	10354	15515
23,0	6477	10806	10806	16192
24,0	6748	11258	11258	16869
25,0	7019	11710	11710	17546
26,0	7289	12162	12162	18224
27,0	7560	12614	12614	18901
28,0	7831	13066	13066	19578
29,0	8102	13518	13518	20255
30,0	8373	13970	13970	20933
31,0	8644	–	–	–
32,0	8915	–	–	–
33,0	9186	–	–	–
34,0	9457	–	–	–
35,0	9727	–	–	–

Applied standards and regulations:
DIN EN ISO 4126-1
AD 2000 data sheets A2
DGR 97/23 EG

Model F / K / S

Set pressure [bar]	Exhaust flow capacity [m³/h] G1	G1 1/4	G1 1/2	G2
0,2	225	376	376	721
0,3	258	430	430	786
0,4	284	473	473	851
0,5	310	517	517	916
0,6	342	571	571	981
0,7	371	618	618	1046
0,8	399	666	666	1111
0,9	429	715	715	1176
1,0	459	766	766	1370
1,2	514	858	858	1514
1,4	571	952	952	1658
1,6	629	1049	1049	1903
1,8	688	1148	1148	2055
2,0	749	1249	1249	2325
2,5	889	1483	1483	2724
3,0	1032	1723	1723	3177
3,5	1165	1943	1943	3583
4,0	1330	2219	2219	4056
4,5	1465	2445	2445	4469
5,0	1601	2671	2671	4962
5,5	1736	2897	2897	5382
6,0	1872	3123	3123	5802

Applied standards and regulations:
DIN EN ISO 4126-1
AD 2000 data sheets A2
TRB 801 No. 22 and No. 23
DGR 97/23 EG

ООО "ПРОВЕРТ" www.prowert.ru info@prowert.ru +7 (495) 108-05-38

Blow-off valves without component test DN3, DN6

To blow out non-poisonous and non-flammable gases into the atmosphere in order to protect pressure tanks against overpressure.
Setting and lead seal at additional charge.

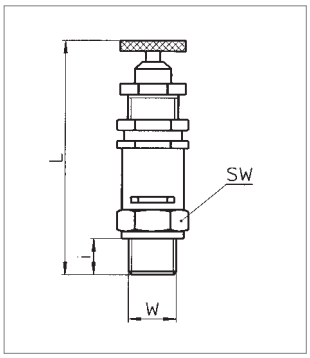

Classic blow-off valves DN6

Setted valves are plumbed.
Metal seated valves may have slight leakage.

Connestion threads W	Seal	Dimensions [mm] L	i	SW	Set pressure [bar]	Order No.
G 1/4	Metal	78	10	17	1,5 - 4,0	**259.007**
					4,0 - 8,0	**259.008**
					8,0 - 12,0	**259.009**
G 1/4	NBR	78	10	17	1,5 - 4,0	**259.010**
					4,0 - 8,0	**259.011**
					8,0 - 12,0	**259.012**

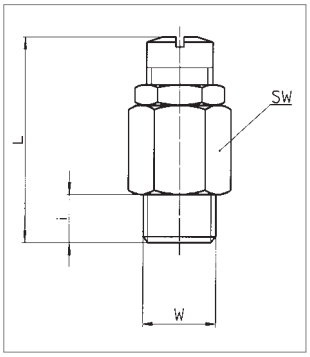

Mini blow-off valve DN3

Setted safety device on request.

Connection threads W	Seal	Dimensions [mm] L	i	SW	Set pressure [bar]	Order No.
G 1/8	NBR	27	7	16	0,2 - 1,0	**368.025**
					1,1 - 3,0	**368.11**
					3,1 - 6,0	**368.12**
					6,1 - 12,0	**368.13**
					12,1 - 18,0	**368.14**
					18,1 - 32,0	**368.15**
					32,1 - 60,0	**368.16**
G 1/4	NBR	27	7	16	0,2 - 1,0	**368.016**
					1,1 - 3,0	**368.21**
					3,1 - 6,0	**368.22**
					6,1 - 12,0	**368.23**
					12,1 - 18,0	**368.24**
					18,1 - 32,0	**368.25**
					32,1 - 60,0	**368.26**

Exhaust capacity air

The exhaust capacities indicated in the table are the minimum values reached when air pressure is raised by 10% above the set pressure.

Set pressure [bar]	Exhaust flow capacity (normal conditioning) [m³/h]	[l/min]
Classi blow-off valve DN6		
1,5	10	165
2	13	215
4	26	430
6	42	700
8	58	970
10	74	1230
12	90	1500
Mini blow-off valve DN3		
1	3	50
4	12	200
6	18	300
10	30	500
20	60	1000
30	90	1500
40	120	2000
50	150	2500
60	180	3000

Intermediate values can be interpolated.

Technical data

		DN6	DN3
Connection thread		G 1/4	G 1/8, G 1/4
Operating temperature	NBR	-10 °C up to +90 °C	
	Metal	-10 °C up to +180 °C	
		other temperatures on request!	
Setting range		1,5 - 12 bar	1 - 60 bar
Opening pressure difference		10% - 15%	~ 20%
Closing pressure difference		15% - 25%	~ 20%
Built-in position		vertical	
Material	- housing	brass	
	- seal	metal, NBR	NBR

Definitions

Set pressure (start-to-leak): beginning of *audible* leaking
Opening pressure: valve completely open, max. blow-off/deflation
Closing pressure: valve is closed and sealed (tight)
Opening pressure difference: difference between start-to-leak pressure and openning pressure
Closing pressure difference: difference between start-to-leak pressure and closing pressure

ООО "ПРОВЕРТ" www.prowert.ru info@prowert.ru +7 (495) 108-05-38

Mufflers of sintered bronze

To reduce the noise of exhaust air on equipment using compressed air, cylinders and valves etc. The strong design makes them suitable for high working pressure an dintermittent opertation. Can be cleaned with all usual detergents.

Mufflers

Connection threads W	Dimensions [mm] L	i	SW	Pore size [µm]	Order No.
With hexagon (fully sintered)					
G 1/8	28,5	4	13	40	**573.1**
G 1/4	33	8	17	40	**573.2**
G 3/8	36	10	22	40	**573.3**
G 1/2	44	12	27	40	**573.6**
G 3/4	54	14	32	40	**573.8**
G 1	66	16	41	40	**573.9**
With hexagon (brass)					
G 1/8	28	6	13	40	**573.11**
G 1/4	34,5	8	16	40	**573.12**
G 3/8	40,5	7,5	19	40	**573.13**
G 1/2	46	10	24	40	**573.16**
G 3/4	50	10	30	40	**573.18**
G 1	60,5	11,5	36	40	**573.19**
With hexagon, flat type					
G 1/8	13	6	13	100	**573.21**
G 1/4	16,5	8	16	100	**573.22**
G 3/8	16,5	7,5	19	100	**573.23**
G 1/2	19	10	24	100	**573.26**
G 3/4	19	10	30	100	**573.28**
G 1	22	12	36	100	**573.29**
Flat type with slot					
G 1/8	5	-	-	50	**573.31**
G 1/4	6	-	-	50	**573.32**
G 3/8	7	-	-	50	**573.33**
G 1/2	9	-	-	50	**573.36**
G 3/4	8	-	-	50	**573.38**
G 1	10	-	-	50	**573.39**

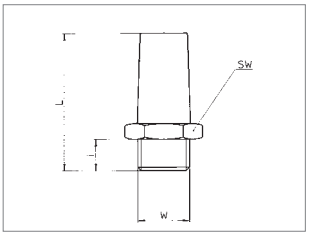

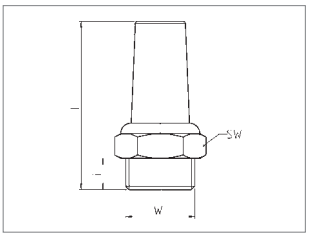

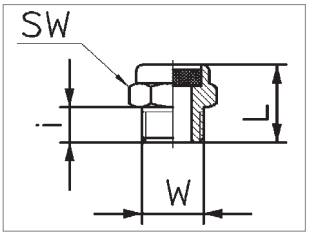

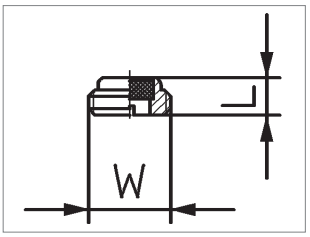

Mufflers throttle type, adjustable

About an adjusting the exhaust air volume can be adjusted.

Connection threads W	Dimensions [mm] L	i	SW	Pore size [µm]	Order No.
With hexagon (brass), lockable with counter nut					
G 1/8	28,5	4	13	50	**573.41**
G 1/4	33	8	17	50	**573.42**
G 3/8	36	10	22	50	**573.43**
G 1/2	44	12	27	50	**573.46**
G 3/4	54	14	32	50	**573.48**
G 1	66	16	41	50	**573.49**
With knurled screw, lockable by spring power					
G 1/8	28	6	13	100	**573.51**
G 1/4	34,5	8	16	100	**573.52**
G 3/8	40,5	7,5	19	100	**573.53**
G 1/2	46	10	24	100	**573.56**
G 3/4	50	10	30	100	**573.58**
G 1	60,5	11,5	36	100	**573.59**

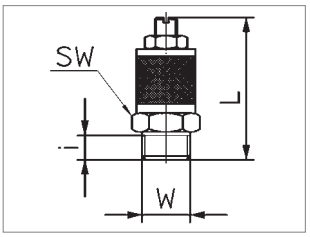

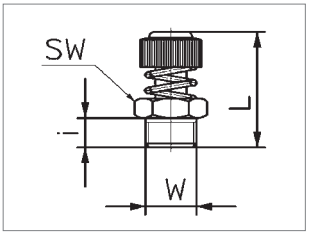

Technical data

Max. back pressure	- 573.21-39, 573.51-59	16 bar
	- 573.11-19, 573.41-49	12 bar
Operating temperature		-10 °C up to +180 °C
Mounting position		any

ООО "ПРОВЕРТ" www.prowert.ru info@prowert.ru +7 (495) 108-05-38

Mufflers (plastic, steel)

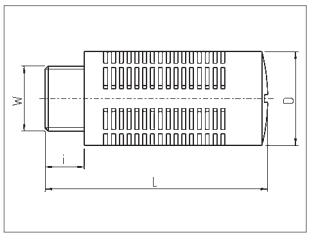

Muffler, plastic

To reduce the noise of exhaust air on equipment using compressed air, cylinders and valves etc..

Connection threads W	Dimensions [mm] L	i	D	Order No.
G 1/4	43	8	20	**573.62**
G 3/8	57	10	24	**573.63**
G 1/2	57	10	24	**573.64**

Technical data

Max. back pressure		6 bar
Operating temperature		-10 °C up to +90 °C
Mounting position		any
Material	- housing	plastic
	- damping	plastic balls

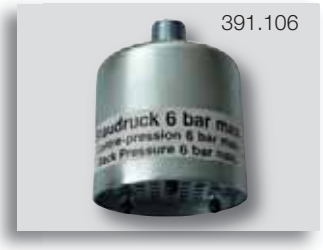

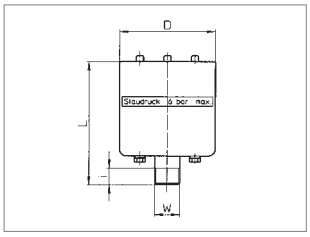

Multi-chamber mufflers

This muffler combines in ideal fashion the three most important requirements of a muffler; high blow-off capacity, short exhaust time, strong silencing effect. The axial air-exhaust at the outlet allows the air to escape in a safe direction. Temperatures up to 90 °C in conti-nuous operation, water-resistent and oil-resistent, can be cleaned by washing out with petrol, back pressure: 6 bar.

Connection threads W	Dimensions [mm] L	i	D	Rates of flow [m³/h]	[l/min]	Sound level [dB(A)]	Order No.
G 1/2	103	14	80	800	13350	88	**391.106**
G 3/4	106	16	80	1000	16700	88	**391.108**
G 1	134	18	110	1400	23350	88	**391.109**
G 1 1/4	140	20	110	1900	31700	89	**391.110**
G 1 1/2	172	24	150	3200	53400	91	**391.111**
G 2	172	24	150	3400	56700	92	**391.112**

Technical data

Max. back pressure		6 bar
Operating temperature		-10 °C up to +90 °C
Mounting position		any
Material	- housing	galvanized steel
	- perforated plates, connection piece	galvanized steel
	- filter plates	polyester felt, resin bonded, resistent to ageing

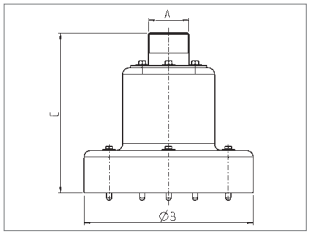

Safety mufflers

Safety mufflers are used to reduce the exhaust noise of pneumatic components, cylinders, valves, etc.. These safety silencers are designed for effective noise reduction of temporary occurring flow peaks, such as when the pressure in vessels release. They have flexibly mounted baffles and filters.

Features: Short venting time and high blow-off volume. With the axial air outlet, the air can blow out in non-hazardous directions. Temperatures up to 60 °C at continuous operation. Oil and water resistant, cleaning by washing with gasoline. Inlet damper is decoupled.

Connection threads A	Dimensions [mm] B	C	Pressure reduct. time [ms]	Sound level [dB(A)]	Order No.
G 3/4	200	179	180	85	**391.208**
G 1	200	182	120	84	**391.209**
G 1 1/4	200	188	113	84	**391.210**
G 1 1/2	200	196	93	87	**391.211**
G 2	200	196	77	86	**391.212**

Technical data

Max. back pressure		6 bar
Operating temperature		-10 °C up to +60 °C (Please consider ambient air quality at temperatures under +2 °C! To ensure a save operation of valve an muffler, it is important that the air is dry enough to prevent the muffler from icing.)
Mounting position		any, connection axial
Material	- housing	galvanized steel
	- perforated plates, connection piece	galvanized steel
	- filter plates	polyester felt, resin bonded, resistant to ageing
	- caps	PVC, black

ООО "ПРОВЕРТ" www.prowert.ru info@prowert.ru +7 (495) 108-05-38

Gauges ø40 and 50

EN837-1
Reed pen pressure gauges with horizontal (behind) or vertical (below) connections. Diameter 40, 50, 63 and 100mm. Various display ranges. The display range should be used between 2/3 to 3/4, i.e. a pressure regulator with a display range 0,5 to 10bar is equipped with a pressure gauge with display range 0 to 16bar.

Gauges ø40

Display in bar and psi. With brass thread.
Plastic panel, housing ABS black. Class 2,5. Tmax 60°C.

Connection threads	Display ranges [bar]	Ground/Imprint	Order No.
Connection horizontal			
G 1/8	0 - 2,5	black/white	**640**
	0 - 4	black/white	**650**
	0 - 6	black/white	**660**
	0 - 10	black/white	**670**
	0 - 16	black/white	**680**
	0 - 25	black/white	**690**
G 1/4	0 - 2,5	black/white	**708**
	0 - 4	black/white	**709**
	0 - 6	black/white	**714**
	0 - 10	black/white	**723**
	0 - 16	black/white	**734**
	0 - 25	black/white	**745**
M8x1 (special model)	0 - 3	black/white	**669**
	0 - 6	black/white	**673**
	0 - 10	black/white	**674**
	0 - 16	black/white	**675**
Connection horizontal, version with additional **color coding** (red/green)			
G 1/4	0 - 16	black/white	**746**

Gauges ø50

Display in bar and psi. With brass thread.
Plastic panel, housing ABS black. Class 2,5. Tmax 60°C.

Connection threads	Display ranges [bar]	Ground/Imprint	Order No.
Connection horizontal			
G 1/4	0 - 2,5	black/white	**40**
	0 - 4	black/white	**41**
	0 - 6	black/white	**42**
	0 - 10	black/white	**55**
	0 - 16	black/white	**85**
	0 - 25	black/white	**96**
Connection horizontal, version with **glass panel** and **steel case (black)**			
G 1/4	0 - 6	black/white	**44**
	0 - 10	black/white	**57**
	0 - 16	black/white	**89**
Connection horizontal, version with **color code** (red/green) and **steel case**			
G 1/4	0 - 16	white/black	**105**
Connection vertical			
G 1/8	0 - 16	black/white	**56**
G 1/4	0 - 16	black/white	**70**
G 1/4	0 - 2,5	white/black-red	**73**
	0 - 4		**74**
	0 - 6		**75**
	0 - 10		**76**
	0 - 16		**77**
	0 - 25		**78**
	0 - 40		**79**

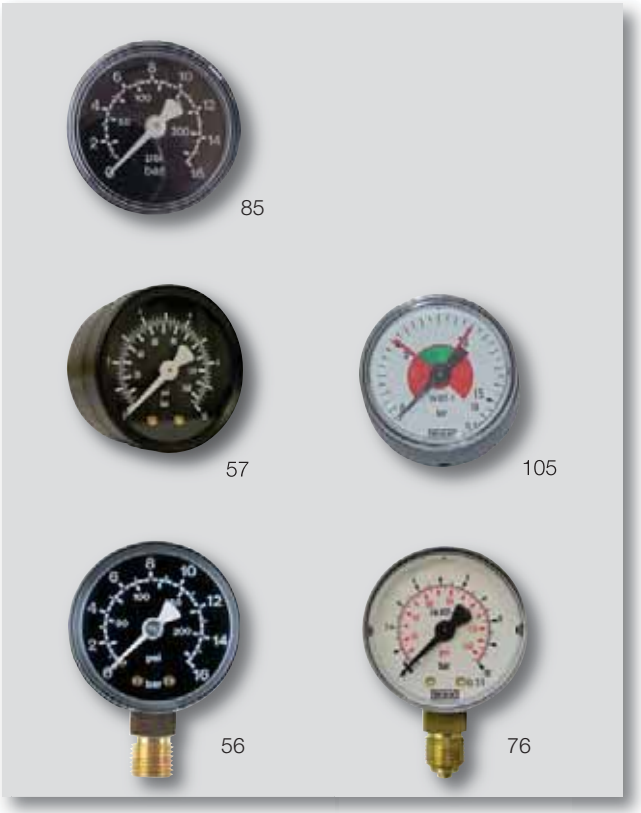

ООО "ПРОВЕРТ" www.prowert.ru info@prowert.ru +7 (495) 108-05-38

Gauges ø63

EN 837-1

Gauges ø63

Display in bar and psi. With brass thread.
Plastic panel, housing ABS black. Class 2,5. Tmax 60 °C.

Connection threads	Display ranges [bar]	Ground/Imprint	Order No.
Connection horizontal			
G 1/4	0 - 2,5	black/white	**211**
	0 - 4	black/white	**212**
	0 - 6	black/white	**213**
	0 - 10	black/white	**214**
	0 - 16	black/white	**215**
	0 - 25	black/white	**216**
	0 - 40	black/white	**217**
	0 - 60	black/white	**218**
Connection vertical			
G 1/4	0 - 2,5	white/black-red	**173**
	0 - 4	white/black-red	**174**
	0 - 6	white/black-red	**175**
	0 - 10	white/black-red	**176**
	0 - 16	white/black-red	**177**
	0 - 25	white/black-red	**178**
	0 - 40	white/black-red	**179**

Glycerin gauges ø63

Particularly resistant due to glycerine filling. Display in bar and psi. With brass thread.
Plastic panel, housing stainless steel. Class 1,6. Tmax 60 °C.

Connection threads	Display ranges [bar]	Ground/Imprint	Order No.
Connection horizontal			
G 1/4	0 - 2,5	white/black-red	**183**
	0 - 4	white/black-red	**184**
	0 - 6	white/black-red	**185**
	0 - 10	white/black-red	**186**
	0 - 16	white/black-red	**187**
	0 - 25	white/black-red	**188**
	0 - 40	white/black-red	**189**
	0 - 60	white/black-red	**223**
Connection vertical			
G 1/4	0 - 2,5	white/black-red	**193**
	0 - 4	white/black-red	**194**
	0 - 6	white/black-red	**195**
	0 - 10	white/black-red	**196**
	0 - 16	white/black-red	**197**
	0 - 25	white/black-red	**198**
	0 - 40	white/black-red	**199**

Gauges ø63

Tick marks 0,1 bar. Display in bar and psi. Mit Messinggewinde. Plastic panel. Housing ABS black or steel enclosure (No. 279). Tmax 60 °C.

Connect. threads	Display range [bar]	Grade	Calibration	Ground/Imprint	Order No.
Connection horizontal					
G 1/4	0 - 6	class 2,5	not calibration	white/black	**257**
	0 -10	class 1	for calibration	black/white	**208**
	0 -10	class 1,6	not calibration	black/white	**279**

ООО "ПРОВЕРТ" www.prowert.ru info@prowert.ru +7 (495) 108-05-38

Gauges ø100, gauges for cylinder gases, accessories

Bourdon tube gauges ø100

For machine and plant engineering. Provides high accuracy under tough conditions. **EN837-1.**
Display in bar. With brass thread. Panel at **instrument glass**. Robust **bayonet bezel stainless steel** 304, with **pressure relief opening.** For gaseous (not acetylene and oxygen) and liquid media (which are not highly viscous, does not crystallise) and not attack copper alloys. Degree of protection **IP54** (EN60529). Class 1,0. Tmax 60°C. SW 22.

Connection threads	Display ranges [bar]	Ground/Imprint	Order No.
Connection horizontal			
G 1/2 B	0 - 2,5	white/black	**130**
	0 - 4	white/black	**131**
	0 - 6	white/black	**132**
	0 - 10	white/black	**133**
	0 - 16	white/black	**134**
	0 - 25	white/black	**135**
	0 - 40	white/black	**136**

130

Gauges for cylinder gases ø63

Safety gauges ISO 5171 (earlier DIN EN 562).
Display in bar. With brass thread. Plastic panel, **steel housing** with pressure relief opening behind. Class 2,5. Tmax 60°C. Available with bar or liter scale. Bar scale also available as a variant with label for gas type. By marking.

Conn. threads	Label for gas type	Display ranges [bar]	Red marker at	Ground/ Imprint	Order No.
Connection vertical, scale bar					
G 1/4	Acetylen	0 - 2,5	1,5 bar	white/black	**221**
	Acetylen	0 - 40	26 bar	white/black	**314**
	Sauerstoff	0 - 16	10 bar	white/black	**291**
	Sauerstoff	0 - 40	20 bar	white/black	**321**
	Sauerstoff	0 - 315	200 bar	white/black	**341**
	–	0 - 2,5	1,5 bar	white/black	**222**
	–	0 - 6	4 bar	white/black	**234**
	–	0 - 16	10 bar	white/black	**290**
	–	0 - 40	20 bar	white/black	**320**
	–	0 - 100	50 bar	white/black	**330**
	–	0 - 315	200 bar	white/black	**340**
	–	0 - 315	230 bar	white/black	**206**
	–	0 - 400	300 bar	white/black	**368**

Connection vertical, liter scale

Connection threads	Display ranges [l/min]	Marker at	Ground/Imprint	Order No.
G 1/4	0 - 32	14,5 l/min	white/black-red	**203**
G 1/4	0 - 32	24 l/min	white/black-red	**205**

221

290

203

Accessories for gauges

Article	Order No.
Gasket nature PA captive G 1/4	**480-71**
Aluminum sealing ring G 1/4	**E61044**

480-71

E61044

ООО "ПРОВЕРТ" www.prowert.ru info@prowert.ru +7 (495) 108-05-38

Teflon sealing tapes, thread sealing yarn, oils

Teflon sealing tapes

DVGW approved and BAM tested. Length 12 m.

Thickbess: 0,10 mm, width: 12 mm. Temperature range -20 °C up to +125 °C.

Versions	Teflon share	Order No.
Fine thread FRp	60 g/m²	**E63199**
Coarse thread GRp	100 g/m²	**E63198**

Thread sealing yarn

Certificated by the DVGW admitted for drinking water. Acc. to DIN 30660. To seal threads connected to drinking water, gas, compressed air, oxygen and industrial oils. Replacement for traditionally used hemp. Screw connection stays tight when being unscrewed (up to 45 °C). Coil length 75 m. Temperature range -200 °C up to +240 °C.

Article	Order No.
Thread sealing yarn	**E63197**

Special air oil

Compressed air special oil for lubricators and maintenance units according to DIN 51524-2 with viscosity class VG 32 according to ISO 3448 (viscosity at 40° C - 32 mm²/s; 32 cSt). The oil contains surface active substances, which provide corrosion protection over a large temperature range. It also takes up condensation water (demulsifying). The 1-litre polyethylene bottle with volume scale has a practical filling hose, which can be pulled out after unscrewing the sealing cap.
Temperature range -20 °C up to +80 °C.

Container	Order No.
Volume 1 litre	**583**
Volume 5 litres	**583.1**

Compressor-oil

ISO 150 DD, DIN 51506. Air compressor oil for piston compressores according to DIN 510506 for compressor temperatures up to 220 °C. This oil, based on mineral oil with a powerful dispersion and detergency capability prevents deposting of aging products and foreign objects. This has a strong resistance against corrosion through its condensed water absorbing qualities (demulsifying). Its positive resistance against oxidation provides safety against explosions.

Container	Order No.
Volume 1 litre	**583.10**

ООО "ПРОВЕРТ" www.prowert.ru info@prowert.ru +7 (495) 108-05-38

Garage Equipment

Tire inflators	Digital automatic tire inflators	“airmate”/”pneumate” (with declaration of conformity)	2
	Portable tire inflator with air tank	“airquick” (calibration possible)	3
	Hand tire inflators	“euroair digital“ (calibration possible)	4
		“euroair” (calibration possible)	5
		“airstar” (calibration possible)	6
	Precision tire gauge (uncalibrated)		7
	Hand tire inflators, gun shape, aluminum	“airmaster premium” (calibration possible)	8
		“airmaster standard“ (calibration not possible)	9
		“airmaster vario” (calibration not possible)	10
	Hand tire inflators, gun shape, plastic	“pneulight” (calibration not possible)	11
	Impact wrench 3/8” and 1/2” / Socket set 1/2”		12
	Inline filters, inline regulators, air flow valves, swivel connectors		13
Fluids as working agents	Blowguns: Overview of all models		14 – 15
	Examples of combinations (blowgun-nozzle)	Blowgun aluminum anodized with nozzles	16
		Blowgun “blowcontrol” with nozzles	
		Blowgun aluminum forged with nozzles	17
		Blowgun, comp. air on top, with nozzle	
		Bowgun straight, “blowlight”, with nozzle	
		Blowgun, plastic, with nozzles	18
	Special blowguns	Blowpen, rubber blow gun	18
	Nozzles for blowguns	Nozzles	19
		Extension nozzles	20
	Extensions for blowguns		21
	Special nozzles	Adjustable air-saving nozzle, bicycle nipple, safety flat fan nozzle	22
	Accessories (nozzle attachments)	Blowgun pressure relief valve, volume pressure control valve, protection shield	22
	Blowing sets	Models “airclassic”, “airbasic”, “airprofi”, model with comp. air connection on top	23
	Compressed air suction gun		23
	Washing guns	Washing gun basic model, brass, Safety washing guns, aluminum models “multiclean”, “proficlean”, Washing gun “powerclean”, aluminum	24
Fluids as transport agents	Spray guns for thin fluid liquids	Spray gun model “multispray”, Spray gun	25
		Spray gun for chassis	26
	Spray guns for viscous media	With pressure cup, model “carprotect“, Compressed air cartridge gun	27
	Sand blasting guns		28
	HVLP Paint spray guns	Model “minipaint”, mixing cup system	29
		Model “smartpaint”	30
		Model “paintprofi”	31
	Painting set		32
	Filter-regulator stations	Model “microair”	32

ООО "ПРОВЕРТ" www.prowert.ru info@prowert.ru +7 (495) 108-05-38

Digital automatic tire inflators - airmate/pneumate

With declaration of conformity.

The digital stationary tire inflator facilitate filling and testing of car- (max. 5.5 bar filling pressure) and truck tires (maximum filling pressure 10 bar). After entering the desired tire pressure, an automatic adjustment to the preset value takes place. Operation is easy thanks to four touch-sensitive and comfortable buttons. The indication of tire pressure is at a large, illuminated LCD display, supported by beeps. Suitable for indoor and outdoor use in wall or column mounting.

- Model **airmate** is primarily for use at service stations or filling stations, with the filling of bicycle tires and small tires because of possible overfilling is prohibited!
- Model **pneumate** has additional features such as setting pressure mode and nitrogen washing for professional use in tire assemblers and car workshops.

The devices are CE marked (73/23/EEC), conformity proofed acc. to MID and have an approval of the German PTB (Physikalisch-Technische Bundesanstalt).

Article	Declaration of conformity	Suitable for	Max. filling pressure	Order No.
airmate	with*	cars	5,5 bar	**477.10**
airmate	without	cars	5,5 bar	**477.11**
airmate	with*	trucks	10,0 bar	**477.30**
airmate	without	trucks	10,0 bar	**477.31**
pneumate	with*	trucks	10,0 bar	**477.20**
pneumate	without	trucks	10,0 bar	**477.21**

*Fee for declaration of conformity is charged separately.

Spare parts and accessories

Article	Description	Order No.
PVC filling hose complete	10,0 m (DN6) with clip connector	**477-29**
Gummi-Füllschlauch complete	10,0 m (DN6) with clip connector	**477-34**
	2,5 m (DN6,5) with clip connector	**477-42**
PU spiral hose complete	5,0 m (DN6,5) with clip connector	**477-43**
	10,0 m (DN6,5) with clip connector	**477-35**
Clip connector	brass, G 1/4 i	**477-31**
Garage wall holder	aluminum (size III)	**E42071**
Automatic hose reel	with 12 m PU hose, G 1/4 i	**477-36**
Filter air inlet and outlet	PE, 100 µm	**477-37**

Technical data

	airmate	pneumate
National type approval	18.08 / 08.06	18.08 / 08.07
Declaration of conformity	Inspection sticker is indicating the year of conformity proof. following proof necessary after two years	
Medium	comp. air (filter installed at the entrance), or nitrogen, dry	
Max. pressure	16 bar	
Min. pressure	12 bar (LKW) / 7,0 bar (PKW)	12 bar
Max. charging pressure	10 bar (LKW) / 5,5 bar (PKW)	10 bar
Connection	G 1/4 i	
Pressure sensor	ceramic	
Accuracy	± 0,5 %	
Calibration	automatic	
Display units	bar / psi	
Display (backlight)	LCD, 30 mm high	
Voltage (regulated)	90-240 V / 50-60 Hz	
Power consumption	16 W	
Protection category	IP 54	
Fuse	3 A	
Working temperature	-40 °C up to +70 °C (heater installed)	
Dimensions	ø240 x 100 mm	
Weight (without hose)	2,5 kg	
Material - housing	aluminum, coated	
- display	polycarbonate	
Waste electrical and electronic equipment	WEE reg. No.: DE51604370	

ООО "ПРОВЕРТ" www.prowert.ru info@prowert.ru +7 (495) 108-05-38

Portable tire inflators with air tank - airquick

Calibration possible.

The portable tire inflator is the ideal equipment for mobile operation. The simple, one hand operation by means of the light-weight plus-minus handle (aluminum) is easily understandable even for untrained people with the advantage of easy repair and replacement. The large gauge, positioned at a slant to prevent retention of rain-water, helps to eliminate any reading mistakes. The twin hold-on connector that goes over the tire valve also allows the testing of twin tires and motor-cycle tires. The built-in airtank means that the equipment can be used independently of the source of compressed air. Refilling is done automatically when the pressure gauge is hung on its charging point ensuring that sufficient pressure is available at any time.

Model	Calibration	Pressure range	Order No.
With air tank and filling valve	calibrated*	0-10 bar	**350.20**
With air tank and filling valve	uncalibrated	0-10 bar	**350.21**

*Calibration fee is charged separately

Spare parts and accessories

Article	Description	Order No.
Filling valve with bracket	Connection thread G 1/2, with rubber bumper	**350.16**
Filling valve	Connection thread G 1/2	**350.13**
Gauge	ø160, pressure range 0-10 bar	**600**
Hand grip	with double sided push-on connector and hose 1000 mm	**350-161**
	with double sided push-on connector	**350-162**
Hose	complete, length 1000 mm	**350-72**
Double sided push-on connector	bent	**350-120**

Technical data

EEC test approval mark	CE D OO 18.08.02
Calibration approval	Year of calibration is shown on calibration sticker. Re-calibration is necessary after two years!
Gauge	precision class 1 ø160, 20° inclined pressure range 0-10 bar, sub scale 0-140 psi 86/217 EWG safe for overpressure up to 13 bar
Air tank	Approval No: CE 2004-0036, capacity 6 Liter, max. filling pressure 16 bar, approved as compressed gastank
Double sided push-on connector	For all tire valves with valve threads VG 8 (cars, trucks, motorcycles), with double connection for twin tires
Operating temperature	-10 °C up to +60 °C
Weight	7,1 kg

Longer hoses available upon request!

ООО "ПРОВЕРТ" www.prowert.ru info@prowert.ru +7 (495) 108-05-38
12 Garage Equipment

Digital hand tire inflators - euroair digital -

With declaration of conformity.

Professional unit with digital manometer and PTB approval. Operated by our proven single lever operation device, rotatable filling hose with three varieties of connectors (level valve-, clip- or double side push-on connector). Air connection with coupling DN 7,2. Meets the highest quality and performance demands in professional daily use at tire assemblers, motor vehicle service garages, fleets and in racing environments. Precision gauge indicator with a good clearness of display, combined with a simple handling and robust construction. **Also suitable for inflating with nitrogen!**

Model	Declaration of conformity	Weight (g)	Order No.
With lever-valve connector	with*	840	**152.201**
	without	840	**152.241**
With clip connector	with*	820	**152.261**
	without	820	**152.271**
With double sided push-on connector	with*	945	**152.211**
	without	945	**152.251**

*Fee for declaration of conformity is charged separately.

Optionally available:
Lever-valve connector and clip connector with **2,5 m filling hose** (recommendation acc. to BGI 884).
Additional order **XL!**
I. e. euroair digital with lever-valve connector without declaration of conformity: 152.241**XL**

Spare parts and accessories

Article	Description	Order No.
Digital gauge	with rubber cap 0 - 12 bar	**152-3**
Battery	3 V lithium button cell CR2450	**152-4**

Technical data

National type approval	18.08 09.02
Declaration of conformity	Inspection sticker is indicating the year of conformity proof. following proof necessary after two years
Digital gauge	ø 80, safe for overpressure up to 16 bar, rubber cap pressure range: 0 - 12 bar, resolution 0,05 bar (deviation < 0,08 bar)
Operating temperature	-10 °C up to +60 °C
Max. operating pressure (p_1)	12 bar
Lever-valve connector, clip connector and double sided push-on connector	For all tire valves with valve threads VG 8 (cars, trucks, motorcycles), double connection for twin tires and motorcycles.
Compressed air connection	Coupling plug DN 7,2
Waste electrical and electronic equipment	WEE reg. No.: DE51604370

12 Garage Equipment
ООО "ПРОВЕРТ" www.prowert.ru info@prowert.ru +7 (495) 108-05-38

Hand tire inflators - euroair -

Calibration possible.

The classic hand tire inflator constructed in light-weight aluminum with ø80 precision gauge (bar/lb/in²) is the typical professional equipment for service and tire stations as well as workshops that has proven its quality ten thousand of times. By means of the connection to the compressed air supply all compressed air needs can be covered, for example first-time filling when mounting tires. The single-lever operation for deflation (pressed halfway) and inflation (pressed all the way) is easy enough even for self-service. The dial with white numbers against a black background can be read clearly. A choice of three pressure ranges is offered: 0-4 bar, especially for passenger car tires; 0-12 bar** for universal use; and 0-25 bar for airplane and other special tires. The unit is available with the twin hold-on connector. With roating inflation hose. The connection is made by means of couplings.. Filling hose is twistable! Length 50 cm. **Also suitable for inflating with nitrogen!**

Model	Pressure range	Calibration	Weight (g)	Order No.
With lever-valve connector	0 - 4 bar / 56 psi	calibrated*	1250	**151.200**
	0 - 4 bar / 56 psi	uncalibrated	1250	**151.240**
	0 - 12 bar / 170 psi	calibrated*	1250	**151.201**
	0 - 12 bar / 170 psi	uncalibrated	1250	**151.241**
	0 - 25 bar / 350 psi	uncalibrated	1250	**151.243**
With clip connector	0 - 4 bar / 56 psi	calibrated*	1250	**151.260**
	0 - 4 bar / 56 psi	uncalibrated	1250	**151.270**
	0 - 12 bar / 170 psi	calibrated*	1250	**151.261**
	0 - 12 bar / 170 psi	uncalibrated	1250	**151.271**
With double sided push-on connector	0 - 4 bar / 56 psi	calibrated*	1350	**151.210**
	0 - 4 bar / 56 psi	uncalibrated	1350	**151.250**
	0 - 12 bar / 170 psi	calibrated*	1350	**151.211**
	0 - 12 bar / 170 psi	uncalibrated	1350	**151.251**
	0 - 25 bar / 350 psi	uncalibrated	1350	**151.253**

*Calibration fee is charged separately.

Optionally available:
Lever-valve connector and clip connector with **2,5 m filling hose** (recommendation acc. to BGI 884).
Additional order **XL!**
I. e. euroair with lever-valve connector uncalibrated: 151.240**XL**

Spare parts and accessories

Article	Description	Model	Order No.
Gauge	with protection cap 0 - 12 bar	0 - 4 bar / 56 psi	**151-139**
		0 - 12 bar / 170 psi	**151-140**
		0 - 25 bar / 350 psi	**151-141**
Lever-valve connector	valve pin captive	with hose clamp	**151.25**
		with hose 500 mm	**151-26A**
		with hose 2500 mm	**151-184**
Clip connector		with hose clamp	**151-183**
		with hose 500 mm	**151-182**
		with hose 2500 mm	**151-217**
Double sided push-on connector		with hose clamp	**151.51**
		with hose 500 mm	**151-26B**
Double sided push-on connector	for attaching to lever valve or clip connector		**151.50**
Bicycle nipple	for attaching to lever valve or clip connector		**356-18**

Technical data

EEC test approval	(exception: 25 bar): CE D 98 18.08.02
Calibration approval	Year of calibration is shown on calibration sticker, re-calibration is necessary after 2 years
Gauge	ø80, horizontal, quality class 1, safe for overpressure up to end value x 1,3 PE protection cap, with double scale
	Pressure ranges: 0 - 4 bar (0- 56 psi), graduation 0,1 bar 0 - 12 bar (0-170 psi), graduation 0,1 bar 0 - 25 bar (0-350 psi), graduation 0,5 bar
Operating temperature	-10 °C up to +60 °C
Lever-valve connector, clip connector and double sided push-on connector	For all tire valves with valve threads VG 8 (cars, trucks, motorcycles), double connection for twin tires.
Compressed air connection	Coupling plug DN 7,2, option: G 1/4 male thread

Hand tire inflators - airstar -

Calibration possible.

The new hand tire inflator -airstar- with its rubber coated ergonomical metal hand grip is suitable for professional use in tire workshops, garages and truck fleets. It is available in a calibrated and an uncalibrated version. Proven construction type, easy to maintain, with a one-hand control lever. 3 different valve connectors available. Connection to compressed air with coupling plug DN7,2. **Also suitable for inflating with nitrogen!**

Model	Pressure range	Calibration	Order No.
With lever-valve connector	0 - 12 bar	calibrated*	**245.201**
	0 - 12 bar	uncalibrated	**245.241**
With clip connector	0 - 12 bar	calibrated*	**245.261**
	0 - 12 bar	uncalibrated	**245.271**
With double sided push-on connector	0 - 12 bar	calibrated*	**245.211**
	0 - 12 bar	uncalibrated	**245.251**

*Calibration fee is charged separately.

Optionally available:
Lever-valve connector and clip connector with **2,5 m filling hose** (recommendation acc. to BGI 884).
Please add **XL** to your order no.**!**
I. e. airstar with lever-valve connector uncalibrated: 245.241**XL**

Spare parts and accessories

Article	Description	Order No.
Gauge, 0 - 12 bar	ø80, with calibration approval	**440**
Gauge, 0 - 12 bar	complete with connection adapter	**245-101**
Valve insert, complete		**245-10**
Lever-valve connector, valve pin captive	with hose clamp	**151.25**
Clip connector	with hose clamp	**151-183**
Double sided push-on connector	with hose clamp	**151.51**
Hose, length 500 mm	with lever-valve connector	**356-12**
	with clip connector	**356-25**
	with double sided push-on connector	**356-15**
Seal	for lever-valve connector	**1258**
	for double sided push-on connector	**1261**
Bycicle nipple	for attaching to lever valve connector	**356-18**
Tire inflator accessory set	bicycle nipple, ball pin and dinghy nipple	**471-17**

Technical data

Calibration approval	Year of calibration is shown on calibration sticker, re-calibration is necessary after 2 years
Gauge	ø80, horizontal, precision class 1, safe for overpressure up to end value x 1,3 (16 bar), PE protection cap, with double scale pressure range: 0 - 12 bar (0-170 psi), graduation 0,1 bar
Operating temperature	-10 °C up to +40 °C
Max. operating pressure (p_1)	12 bar
Lever-valve connector, clip connector and double sided push-on connector	for all tire valves with valve threads VG 8 (cars, trucks, motorcycles), double connection for twin tires
Comp. air connection	inlet and outlet G 1/4i

ООО "ПРОВЕРТ" www.prowert.ru info@prowert.ru +7 (495) 108-05-38
12 Garage Equipment

Precision tire gauge

Uncalibrated.

Precision tire gauge for cars, motorcycles and bicycles – MADE IN GERMANY –. The direct connection allows accurate measurement of tire pressure in a very simple manner. This construction has the advantage of ease of use and the pressure-tight connection between the tire valve and meter. Two connection options, depending on the application (bottom at the side).

Features:

- Precise measurement from 0 to 4 bar (0.1 bar graduation)
- Gauge (large equipment) with 80 bourdon tube, gauge diameter 80 mm
- Flexible hose (protective metal mesh) with quick connector
- 2 mini couplings DN 5 to connect the hose from the bottom or lateral
- Drain valve to drain the excess pressure
- Robust design with rubber gauge protection

Model	Pressure range	Calibration	Order No.
With clip connector	0 - 4 bar	uncalibrated	**153.420**

Spare parts and accessories

Article	Description	Order No.
Gauge	0 - 4 bar, Ø 80, G 1/4, shape A	**424**
Protection cap	for gauge (rubber)	**153-7**
Testing hose, complete	with coupling plug and clip connector	**153-12**

Technical data

Gauge	Bourdon tube ø 80, horizontal, precision class 1, with protective rubber coat, double scale, pressure range: 0 - 4 bar (0-140 psi), graduation 0,1 bar safe for overpressure up to 5 bar
Operating temperature	-10 °C up to +60 °C
Clip connector	For all tire valves with valve threads VG 8 (cars, trucks, motorcycles)
Compressed air connection	2 Mini couplings DN 5 bottom and lateral

Hand tire inflators, gun shaped - airmaster premium -

Calibration possible.

A compact and calibrated manual tire pressure gauge in the classic and well-established gun shape made of deformation-resistent aluminum as attractive introductory model for the class of calibrated devices. The simple universal control with inclined and easily readable shockproof precision gauge and rotating inflating hose allows easy operation. Ideal for garages and service stations. Connection to compressed air with coupling plug DN 7,2. **Also suitable for inflating with nitrogen!**

Model	Pressure range	Calibration	Order No.
With lever-valve connector	0 - 10 bar	calibrated*	**356.221**
	0 - 10 bar	uncalibrated	**356.321**
With clip connector	0 - 10 bar	calibrated*	**356.223**
	0 - 10 bar	uncalibrated	**356.323**
With double sided push-on connector	0 - 10 bar	calibrated*	**356.222**
	0 - 10 bar	uncalibrated	**356.322**

*Calibration fee is charged separately.

Spare parts and accessories

Article	Description	Order No.
Gauge, 0 - 10 bar	ø63, with calibration approval, with protection cap	**356-29**
Gauge, 0 - 10 bar	ø63, with calibration approval (no cap)	**208**
Protection cap	for gauge ø63	**356-13**
Lever-valve connector, valve pin captive	with hose clamp	**151.25**
Clip connector	with hose clamp	**151-183**
Double sided push-on connector	with hose clamp	**151.51**
Hose, length 500 mm	with lever-valve connector	**356-12**
	with clip connector	**356-25**
	with double sided push-on connector	**356-15**
Seal	for lever-valve connector	**1258**
	for double sided push-on connector´	**1261**
Bycicle nipple	for attaching to lever valve connector	**356-18**
Tire inflator accessory set	bicycle nipple, ball pin and dinghy nipple	**471-17**

Technical data

EEC test approval	Directive 86/217/EEC CE D 00 18.08.04
Calibration approval	Year of calibration is shown on calibration sticker, re-calibration is necessary after 2 years
Gauge	ø63, horizontal, precision class 1, safe for overpressure up to 13 bar with metal housing, with protection cap, with double scale, pressure range: 0 - 10 bar (0-140 psi), graduation 0,1 bar
Max. operating pressure (p_1)	12 bar
Operating temperature	-10 °C up to +60 °C
Lever-valve connector, clip connector and double sided push-on connector	For all tire valves with valve threads VG 8 (cars, trucks, motorcycles, bicycles), double connection for twin tires
Comp. air connection	Coupling plug DN 7,2 (optional: G 1/4 female)

ООО "ПРОВЕРТ" www.prowert.ru info@prowert.ru +7 (495) 108-05-38

Hand tire inflators, gun shaped - airmaster standard -

Calibration not possible.

The non-calibratable alternative to the airmaster premium model. Identical product features except for gauge (not approved for calibration). **Also suitable for inflating with nitrogen!**

Model	Pressure range	Comp. air connection	Order No.
With lever-valve connector	0-10 bar	Hose tail LW6	**356.111**
	0-10 bar	Coupling plug DN7,2	**356.121**
With clip connector	0-10 bar	Hose tail LW6	**356.113**
	0-10 bar	Coupling plug DN7,2	**356.123**
With double sided push-on connector	0-10 bar	Hose tail LW6	**356.112**
	0-10 bar	Coupling plug DN7,2	**356.122**

Spare parts and accessories

Article	Description	Order No.
Gauge, 0-10 bar	ø63, with protection cap	**356-19**
Gauge, 0-10 bar	ø63, without protection cap	**279**
Protection cap	for gauge ø63	**356-13**
Lever-valve connector, valve pin captive	with hose clamp	**151.25**
Clip connector	with hose clamp	**151-183**
Double sided push-on connector	with hose clamp	**151.51**
Hose, length 500 mm	with lever-valve connector	**356-12**
	with clip connector	**356-25**
	with double sided push-on connector	**356-15**
Seal	for lever-valve connector	**1258**
	for double sided push-on connector	**1261**
Bycicle nipple	for attaching to lever valve connector	**356-18**
Tire inflator accessory set	bicycle nipple, ball pin and dinghy nipple	**471-17**

Technical data

Gauge	ø63, horizontal, precision class 1, metal housing, double scale, pressure range: 0-10 bar (0-140 psi), graduation 0,1 bar safe for overpressure up to 12 bar
Max. operating pressure (p_1)	12 bar
Operating temperature	-10 °C up to +60 °C
Lever-valve connector, clip connector and double sided push-on connector	For all tire valves with valve threads VG8 (cars, trucks, motorcycles, bicycles), double connection for twin tires
Comp. air connection	Coupling plug DN7,2 or hose tail LW6

Hand tire inflators, gun shaped - airmaster vario -

Calibration not possible.

The proven hand tire inflator -airmaster standard- as an option with a multi coupling at the outlet. This enables the possibility of changing valve attachments by simple coupling. Connection to compressed air with coupling plug DN7,2. Basic model is without hoses! The selected filling hoses have to be ordered separately.

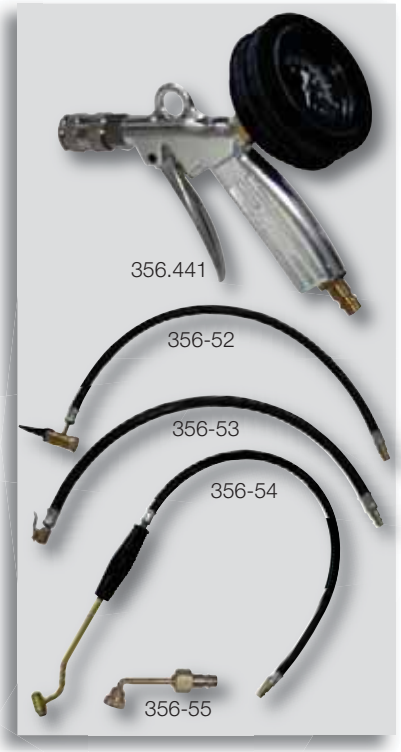

Article	Model	Order No.
Hand tire inflator - airmaster -	basic model, 0-10bar, with multi coupling DN5,5	**356.441**

Filling hose	Model	Order No.
With lever-valve connector	pluggable with coupling plug DN7,2	**356-52**
With clip connector	pluggable with coupling plug DN7,2	**356-53**
With double sided push-on connector	pluggable with coupling plug DN7,2	**356-54**
Bycicle nipple	pluggable with coupling plug DN7,2	**356-55**

Spare parts and accessories

Article	Description	Order No.
Gauge, 0-10bar	ø63, with potection cap	**356-19**
Gauge, 0-10bar	ø63, without protection cap	**279**
Protection cap	for gauge ø63	**356-13**
Lever-valve connector, valve pin captive	with hose clamp	**151.25**
Clip connector	with hose clamp	**151-183**
Double sided push-on connector	with hose clamp	**151.51**
Seal	for lever-valve connector	**1258**
	for double sided push-on connector	**1261**
Bycicle nipple	for attaching to lever valve connector	**356-55**
Tire inflator accessory set	bicycle nipple, ball pin and dinghy nipple, for attaching to lever valve - and clip connector	**471-17**

Technical data

Gauge	ø63, horizontal, precision class 1, double scale, with metal housing pressure range: 0-10bar (0-140psi), graduation 0,1bar safe for overpressure up to12bar
Max. operating pressure (p_1)	10bar
Operating temperature	-10°C up to +60°C
Lever-valve connector, clip connector and double sided push-on connector	for all tire valves with valve threads VG8 (cars, trucks, motorcycles, bicycles), double connection for twin tires
Connections	- gun outlet: multi coupling DN5,5 - hose inlet: coupling plug DN7,2 G1/4, brass
Compr. air connection	coupling plug DN7,2

ООО "ПРОВЕРТ" www.prowert.ru info@prowert.ru +7 (495) 108-05-38

Hand tire inflators, gun shaped - pneulight

Calibration not possible.

The manual tire inflator, having a functionally and ergonomically favorable design (not calibratable) and incorporating a handle body made of highly-resistent plastics and a gauge with fine division and protective rubber cap, has an attractive cost/performance ratio. Lightweight, but nevertheless sturdy design including a finemetering inflating lever and pressure-relieving valve. For cars, construction machines, tractors, motorcycles, mountain bikes, and the like. With rotating inflation hose. Connection to compressed air with coupling plug DN7,2.

Model	Pressure range	Order No.
With lever-valve connector	0 - 10 bar	**471.221**
With clip connector	0 - 10 bar	**471.223**
With double sided push-on connector	0 - 10 bar	**471.222**
With exchangeable twistable unit for bicycle and car valves	0 - 10 bar	**471.301**

Spare parts and accessories

Article	Description	Order No.
Gauge, 0 - 10 bar	ø63, with protection cap	**356-19**
Gauge, 0 - 10 bar	ø63, without protection cap	**279**
Protection cap	for gauge ø63	**356-13**
Lever-valve connector, valve pin captive	with hose clamp	**151.25**
Clip connector	with hose clamp	**151-183**
Double sided push-on connector	with hose clamp	**151.51**
Hose, length 500 mm	with lever-valve connector	**356-12**
	with clip connector	**356-25**
	with double sided push-on connector	**356-15**
Seal	for lever-valve connector	**1258**
	for double sided push-on connector	**1261**
	for bicycle nipple	**1265**
Bycicle nipple	for attaching to lever valve connector	**356-18**
Tire inflator accessory set	bicycle nipple, ball pin and dinghy nipple	**471-17**
Exchangeable unit	for bicycle and car valves, connection G 1/4	**471-24**

Technical data

Gauge	ø63, horizontal, precision class 1, safe for overpressure up to 12 bar with protection cap, with double scale, pressure range: 0 - 10 bar (0-140 psi), graduation 0,1 bar
Recommended operating press.	4 up to 6 bar
Max. operating pressure (p_1)	10 bar
Operating temperature	-10 °C up to +50 °C
Lever-valve connector, clip connector and double sided push-on connector	for all tire valves with valve threads VG 8 (cars, trucks, motorcycles, bicycles), double connection for twin tires
Compressed air connection	coupling plug DN 7,2 (optional: G 1/4 female)
Materials	gun body: polyamide 6 GK 30 (RAL 5012) lever: polyamide 6 GK 30 (RAL 5012) Piston: hostaform C Seal: NBR, PU

Impact wrench

This powerful impact wrench is designed for use in automobile operation, tire assembly, workshops, assembly and mechanical engineering or similar designs and provides the following features:
Twin hammer impact mechanism, stable housing with ergonomic handle. low weight, therefore fatigue-free operation. Very quiet, only 83 dB(A). Adaptation of the optimum torque in 3 stages. Right and left drive operable with one hand. Exhaust through the handle downwards.

Model square drive	Compressed air connection	Order No.
3/8”	G 1/4 (steel plug DN 7,2 added loosely)	**741.130**
1/2” compact	G 1/4 (steel plug DN 7,2 added loosely)	**741.160**
1/2”	G 1/4 (steel plug DN 7,2 added loosely)	**741.180**

Spare parts and accessories

Article	Description	Order No.
1/2” sockets	long, plastic coated, for aluminum wheel rims sizes 17, 19 and 21 in a plastic box	**741.100**

Technical data

	Nr. 741.130	Nr. 741.160	Nr. 741.180
Square drive	3/8” (10 mm)	1/2” (13 mm)	1/2” (13 mm)
Max. free speed [U/min]	11.000	11.000	7.000
Max. torque [Nm]	583	624	1.112
Working torque range [Nm]	34-338	34-338	68-746
Max. release torque [Nm]	678	678	1.756
Average air consumption [l/min]	113	113	113
Recommended operating pressure [bar]	6,2	6,2	6,2
Weight [kg]	1,2	1,2	1,9

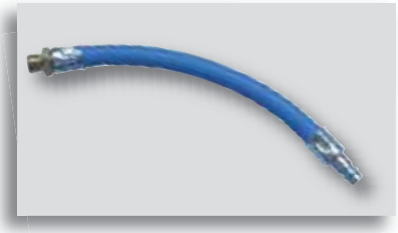

Hose buffer

For direct connection to beating air tools. Prevents premature wear of clutches and push nipples. Hose: PVC air hose “SOFT” LW 9, flexible, oil and gasoline resistant, UV resistant. Length approx. 20 cm.

Connection inlet	Connection outlet	Max. pressure [bar]	Order No.
Coupling plug DN 7,2 (steel)	G 1/4 a (brass)	15	**E40702**

Recommendation for direct lubrication

Article	Order No.
ewo special pneumatic oil, 1 liter bottle	**583**
Small lubricator, connection thread G 1/4, oil mist by flowing air stream	**317.10**

ООО "ПРОВЕРТ" www.prowert.ru info@prowert.ru +7 (495) 108-05-38

Inline filter, inline regulator, air flow valve, swivel connector

For use with pneumatic tools (e. g. impact wrenches).

Inline filters

Connection thread G	Dimensions L	ø	Order No.
1/4	48,8	21	735.22
3/8	50,8	21	735.23

Technical data

Max. operating pressure (p_1)	10 bar
Material	aluminum
Weight	29 g

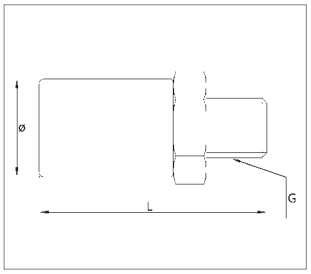

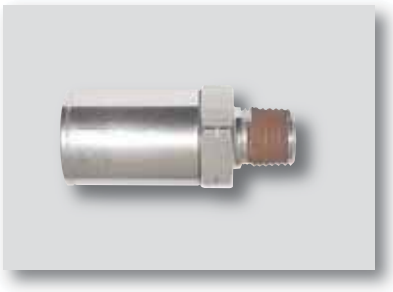

Inline pressure regulator 6 bar, preset

Connection thread G	Dimensions L	ø	Order No.
1/4	62,7	21,8	735.420

Technical data

Max. operating pressure (p_1)	8 bar
Material	aluminum
Weight	41 g

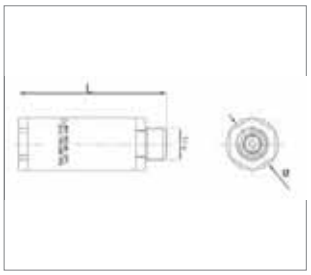

Air flow valve

Connection thread G	Dimensions L	B	Order No.
1/4	39,7	25,9	735.020

Technical data

Max. operating pressure (p_1)	15 bar
Material	aluminum
Weight	18 g

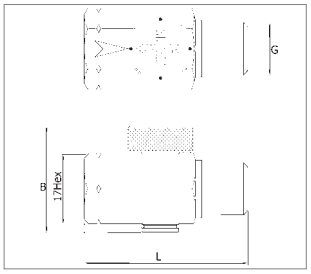

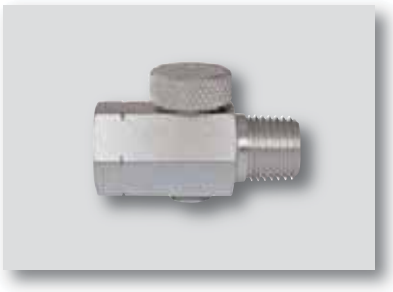

Swivel connectors

Connection thread G	Dimensions A	B	C	D	E	F	H	Order No.
1/4	40,3	19,0	19,0	39,0	28,5	38,5	19	735.153
3/8	45,9	22,2	22,2	53,8	38,0	43,2	22,2	735.154

Technical data

Max. operating pressure (p_1)	10 bar
Material	aluminum
Weight	78 g

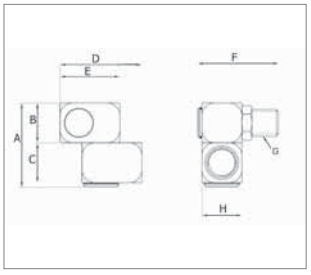

Blow guns, with dosage, forged

Our product range of blow guns includes models made of aluminum and plastic (polyamide). The aluminum models are available in a forged version (clear anodized) and partially in a die-casting version. The assortment contains blow guns in a classical gun shape and one model in straight shape.
For **all blow guns,** the flow through lever operation is intuitive **controlable**. In addition, we offer models with throttle screw to limit the maximum pressure individually as well as a safety gun that is already equipped with a pressure relief to 3.5 bar (acc. to SUVA PRO) right after the input connection.
All **accessories** of ewo nozzles, extensions and different compressed air connections (see page S.19 ff) are suitable for **all ewo blow guns** (nozzle connection: M12x1,25).
On the **compressed air connection** at the bottom, all models are equipped with a **G 1/4 female thread**. Alternatively, it can be equipped with either a clutch connector or hose connection made of brass. Alternatively, there is a version with a compressed air connection on top available. All blow guns with ewo logo are optionally available in a neutral version (without logo). Please give a note when ordering.

Blow gun

Material forged alumium, clear anodized.
The classic blowgun that has proved its usefulness a million times. Debit is dosable by lever operation. Compressed air connection G 1/4 female. Nozzle connection M12x1,25.

Article	Order No.
Blow gun, forged aluminum	**5269.00**

Blow gun “blowcontrol”, adjustable

Material forged alumium, clear anodized.
The classic blowgun with an integrated throttle screw to reduce the individual maximum pressure to the required blow-out. Debit is dosable by lever operation. Compressed air connection G 1/4 female. Nozzle connection M12x1,25.

Article	Order No.
Blow gun blowcontrol, adjustable	**5269.00E**

Safety blow gun “safetyblow”, with pressure reducing valve 3,5 bar

Material forged alumium, clear anodized.
This classic blowgun has an integrated **pressure reducing valve 3,5 bar** acc. to SUVA PRO directive (up to 8 bar) on the inlet. This enables an independance from pre-pressure (up to max. 10 bar). At the same time some risks that appear when handling with compressed air, can be avoided. Debit is dosable by lever operation. Compressed air connection G 1/4 female. Nozzle connection M12x1,25.

Article	Order No.
Blow gun safetyblow	**269.800**

Debit of air (opened at maximum with nozzle DN 4,0)

Operating pressure [bar]	**2**	**4**	**6**	**8**	**10**
Debit [Nl/min]	85	145	200	250	270

Blow gun, compressed air connection on top

Material forged alumium, clear anodized.
Classic blowgun. The upward directed compressed air connection (nickel-platetd brass coupling plug DN 7,2) enables, that compressed air can be received by a suspended power distributor. Debit is dosable by lever operation. Compressed air connection G 1/4 female. Nozzle connection M12x1,25.

Article	Order No.
Blow gun with compressed air connection from above	**269.740**

ООО "ПРОВЕРТ" www.prowert.ru info@prowert.ru +7 (495) 108-05-38

Blow guns, other models

Blow gun, die-casting

Material aluminum die-casting.
The classic blowgun, housing made of die-casting . Debit is dosable by lever operation. Compressed air connection G 1/4 female. Nozzle connection M12x1,25.

Article	Order No.
Blow gun, aluminum die-casting	**5269.00L**

Blow gun, plastic, with dosage

Material polyamide.
The robust polyamide blowgun made of blue crystal ball consolidated polyamide (for a longer life-time) in a solid construction. As further development of the aluminum blow gun this model can be recommended for applications, where due to weight and material reasons a plastic blow gun is preferred (i. e. textile industry, electronic devices etc.). Debit is dosable by lever operation. Compressed air connection G 1/4 female. Nozzle connection M12x1,25.

Article	Order No.
Blow gun plastic (polyamide)	**5470.00**

Blow gun, straight shape

Material alumium, clear anodized.
Easy to handle blow gun in compact dimensions. Debit is dosable by lever operation. Compressed air connection G 1/4 female. Nozzle connection M12x1,25. Maxiamler operating pressure 8 bar.

Article	Order No.
Blow gun, straight shape, aluminum	**270.00**

Technical data

Order No.	**5269.00** **5269.00E** **269.740** **5269.00L**	**269.800**	**270.00**	**5470.00**
Medium	pre-filtered compressed air			
Max. operating pressure (p_1)	10 bar	10 bar (SUVA: 8 bar)	8 bar	10 bar
Recommended operat. pressure	2 - 8 bar	max. blow-out pressure 3,5 bar	1 - 6 bar	2 - 6 bar
Debit compressed air	dosed by lever			
Operating temperature	-10 °C up to +50 °C			
Connection thread inlet	G 1/4 female			
Connection thread outlet (nozzles)	M12x1,25 female			
Material - housing	forged alumium (5269.00L: die-casting), clear anodized			polyamide 6 GK30 (recyclable); blue
- lever	GD-ZnAl4Cu1 zinc-plated			polyamide 6 GK30 (recyclable); blue
- seals	NBR			NBR, PU
- pressure reducing valve		brass	–	–
- pressure pin		brass or steel		
- compression springs		VA-steel 1.4310		
Weight	240 g	255 g	68 g	150 g

Combination examples: Blow guns with nozzles

Blow guns, forged aluminum

With normal nozzle (metal type, aluminum) ø 1,5 mm

Compressed air connection	Connection	Order No.
Coupling plug	DN7,2	269.41
Hose tail	LW 6	269.11
	LW 9	269.17
	LW13	269.18
Female thread	G 1/4 i	5269.01

With full-jet nozzle (metal type, aluminum) ø 2,5 mm

Coupling plug	DN7,2	269.374
Hose tail	LW 6	269.324
	LW 9	269.344
	LW13	269.354
Female thread	G 1/4 i	269.355

With safety and noise silencing nozzle “blowstar”

Coupling plug	DN7,2	269.530
Hose tail	LW 6	269.531
	LW 9	269.532
	LW13	269.533
Female thread	G 1/4 i	269.430

With extension nozzle “safetystar”

Coupling plug	DN7,2	269.220
Hose tail	LW 6	269.221
	LW 9	269.222
	LW13	269.223
Female thread	G 1/4 i	269.224

With extension nozzle (brass), straight, ø 3,0 mm (no fig.)

Compressed air connection	Connection	Nozzle length	Order No.
Coupling plug	DN7,2	265 mm	269.105
	DN7,2	415 mm	269.106

With special extension nozzle (steel nickel-plated), bent ø 2,3 mm (no fig.)

Compressed air connection	Connection	Nozzle length	Order No.
Coupling plug	DN7,2	800 mm	269.107

Blow guns “blowcontrol”, adjustable, forged aluminum

With normal nozzle (metal type, aluminum) ø 1,5 mm

Compressed air connection	Connection	Order No.
Coupling plug	DN7,2	269.41E
Hose tail	LW 6	269.11E
	LW 9	269.17E
	LW13	269.18E
Female thread	G 1/4 i	5269.01E

With full-jet nozzle (metal type, aluminum) ø 2,5 mm

Coupling plug	DN7,2	269.374E
Hose tail	LW 6	269.324E
	LW 9	269.344E
	LW13	269.354E
Female thread	G 1/4 i	269.355E

With safety and noise silencing nozzle “blowstar”

Coupling plug	DN7,2	269.530E
Hose tail	LW 6	269.531E
	LW 9	269.532E
	LW13	269.533E
Female thread	G 1/4 i	269.430E

With extension nozzle “safetystar”

Coupling plug	DN7,2	269.220E
Hose tail	LW 6	269.221E
	LW 9	269.222E
	LW13	269.223E
Female thread	G 1/4 i	269.224E

Blow guns with ewo-Logo also available without logo, neutral

ООО "ПРОВЕРТ" www.prowert.ru info@prowert.ru +7 (495) 108-05-38

Combination examples: Blow guns with nozzles

Blow gun, compressed air connection from above, forged aluminum

With normal nozzle (metal type, aluminum) ø1,5mm

Compressed air connection	Connection thread	Labeling	Order No.
Coupling plug	DN7,2	"ewo"	**269.741**
		without	**269.742**

Other models available upon request!

Blow guns, aluminum die-casting

With normal nozzle (metal type, aluminum) ø1,5mm

Compressed air connection	Connection thread	Order No.
Coupling plug	DN7,2	**269.41L**
Hose tail	LW 6	**269.11L**
	LW 9	**269.17L**
	LW13	**269.18L**
Female thread	G¼i	**5269.20L**

With full-jet nozzle (metal type, aluminum) ø2,5mm

Coupling plug	DN7,2	**269.374L**
Hose tail	LW 6	**269.324L**
	LW 9	**269.344L**
	LW13	**269.354L**
Female thread	G¼i	**5269.34L**

With safety and noise silencing nozzle "blowstar"

Coupling plug	DN7,2	**269.530L**
Hose tail	LW 6	**269.531L**
	LW 9	**269.532L**
	LW13	**269.533L**
Female thread	G¼i	**269.430L**

With extension nozzle "safetystar"

Coupling plug	DN7,2	**269.220L**
Hose tail	LW 6	**269.221L**
	LW 9	**269.222L**
	LW13	**269.223L**
Female thread	G¼i	**269.224L**

With special extension nozzle (steel nickel-plated), ø2,3mm

Compressed air connection	Connection thread	Nozzle shape	Nozzle length	Order No.
Coupling plug	DN7,2	bent	800mm	**269.682L**
	DN7,2	straight	800mm	**269.692L**

Blow guns "blowlight", straight shape, aluminum

With normal nozzle (metal type, aluminum) ø2,0mm

Compressed air connection	Connection thread	Order No.
Coupling plug	DN7,2	**270.41**
Hose tail	LW6	**270.11**
	LW9	**270.17**

Blow guns with "ewo" logo also available without logo, neutral

Combination examples: Plastic blow guns with nozzles

Blow guns, plastic

Without “ewo” logo. Also available with logo.

With normal nozzle (metal type, aluminum) ø 1,5 mm

Compressed air connection	Connection	Order No.
Coupling plug	DN7,2	**470.41**
Hose tail	LW 6	**470.11**
	LW 9	**470.17**
	LW13	**470.18**
Female thread	G 1/4 i	**470.40**

With extension nozzle (steel nickel-plated, without rubber cap) ø 2,3 mm, length 110 mm

Coupling plug	DN7,2	**470.141**
Hose tail	LW 6	**470.111**
	LW 9	**470.117**
	LW13	**470.118**
Female thread	G 1/4 i	**470.140**

Extension nozzle **with** rubber cap (470-44): Order No. with addition **G** (i. e. 470.141**G**)

With safety and noise silencing nozzle “blowstar”

Coupling plug	DN7,2	**470.53**
Hose tail	LW 6	**470.55**
	LW 9	**470.56**
	LW13	**470.57**
Female thread	G 1/4 i	**470.43**

With extension nozzle “safetystar”

Coupling plug	DN7,2	**470.145**
Hose tail	LW 6	**470.148**
	LW 9	**470.151**
	LW13	**470.143**
Female thread	G 1/4 i	**470.146**

Special blow guns

Blowpen with rubber tip, ø 0 - 3,0 mm (adjustable)

With integrated coupling plug DN 7,2.

Handy blowpen with clip attachment. Surface protection by rubber peak. For quick cleaning e.g. the surface during grinding, general metal and wood working, hobbies, etc. Continuously variable airflow adjustment by convenient one-hand operation, from closed to maximum fow. Coupling can be connected directly to DN 7,2.

Article	Order No.
Blowpen with rubber tip and integrated coupling plug DN7,2	**271.41**

Technical data

Max. operating pressure (p_1)	12 bar
Recommended operating pressure	1 - 6 bar
Operating temperature	-10 °C up to +60 °C
Nominal rates of flow	max. 300 l/min at 6 bar
Nozzle DIA	adjustable 0 up to 3 mm
Material	housing - aluminum anodized, seals - NBR

Rubber blowguns, ø 2,0 mm

This blowgun is the ideal unit for all situations in which sensitve surfaces must not be damaged by contact (i. e. dental and paint spraying applications). Operation by bending the rubber mouthpiece. Comp. air connection with hose tail or coupling plug.

Compressed air connection	Connection	Order No.
Coupling plug	DN7,2	**319.41**
Hose tail	LW6	**319.11**
	LW9	**319.17**

Technical data

Max. operating pressure (p_1)	10 bar
Recommended operating pressure	1 - 6 bar
Operating temperature	-10 °C up to +50 °C
Nozzle DIA	2,0

Rates of flow

12 Garage Equipment
ООО "ПРОВЕРТ" www.prowert.ru info@prowert.ru +7 (495) 108-05-38

Nozzles

All nozzles with connection thread M12x1,25.

Standard nozzles

Standard nozzle for all blow guns. Concentrated jet with high blowing power. Sound level over 90dB (A) at pressures above 4bar. With centered hole, ø1,5-6 mm available. Polyamide version only with ø1,5mm.

Model	Material	Order No.
Bore hole ø1,5*	aluminum	**105-6**
Bore hole ø1,5	plastic (polyamide), blue	**470-843**

* Other bore hole ø available upon request.

105-6

470-843

Silent nozzle

Extremely quiet by sinter insert. Sound level generally below 70dB (A), wide air jet with low blowing power.

Model	Material	Order No.
With sinter insert	aluminum / sintered metal	**269-33**

269-33

Full-jet nozzles

Wide air jet producing high blowing power by injector. Sound level over 90dB(A). Recommended pressure < 2bar, then blowing power at 90dB(A).

Model	Material	Order No.
Bore hole ø2,0	plastic, black	**269-45**
Bore hole ø2,5	aluminum	**269-59**

269-45

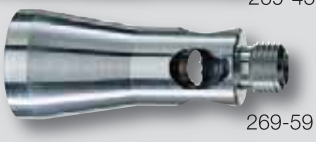
269-59

Air-shield nozzle

Like a normal nozzle but with the addition of an air-shield which prevents small particles from flying off. It also has a slight muffling effect. High blowing power. Centered hole and circular holes. Sound level <85dB(A) at 6bar.

Model	Material	Order No.
Bore hole ø1,5	aluminum	**269-27**

269-27

Safety and noise silencing nozzle „blowstar“

A combined safety and noise silencing nozzle - to avoid risks and dangers when handling the energy carrier `compressed air´, in particular in direct skin contact.
Working conditions are appreciably improved through a substantial reduction in noise to as low as 74dB(A). In contrast, the noise level of conventional blow nozzles is more than 90dB(A) at 6bar. A reduction of the noise level by 8dB(A) is experienced by the human ear already a half the noise. Nevertheless, the principle of the full-cone nozzle results in excellent concentric blowing giving maximum efficiency. The resulting blowing power is 2,5 times higher than that of a classic single-hole nozzle. Thus, the two-part `blowstar nozzle´ is the recommended choice especially for compressedair blow guns, but also as an individually used process nozzle.

It currently meets the following safety regulations and directives:
- Swiss Accident Insurance Fund (SUVA)
- BG Directive (Noise) Directive 2003/10/EC
- Noise-at-work legislation (TRLV-noise)
- BG Machinery Directive 2006/42/EC, EN12100
- OSHA Regulations

2-part nozzle. Available with or without screwed-in double nipple. Materials: zinc die casting or POM. Double nipple aluminum (or as a variant in black anodized).

Model	Material	Order No.
Nozzle with double nipple	zinc die casting / aluminum	**470-39**
	POM / aluminum black anodized	**470-393**
Nozzle without double nipple	zinc die casting	**470-37**
	POM	**470-373**
Spare part: Double nipple G1/4i x M12x1,25	aluminum	**470-38**
	aluminum black anodized	**470-383**

470-39

470-38

470-393

470-383

Rates of flow

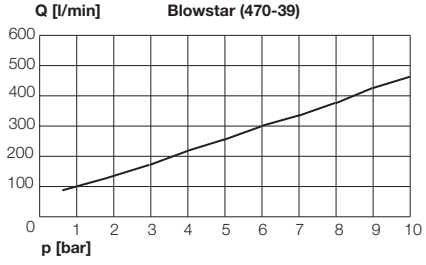

Sound level

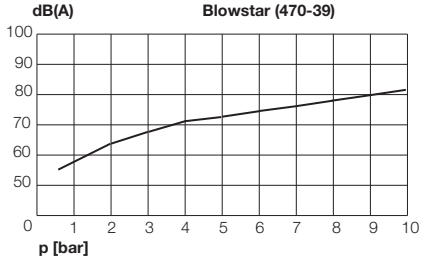

Extension nozzles

Extension nozzles, brass

Available in straight or bent shape. Bore hole ø5mm.

Model	Material	Length	Order No.
Straight, bore hole ø3,0	brass nickel-plated	115mm	**105-103**
		165mm	**105-104**
		265mm	**105-105**
		415mm	**105-107**
Bent, bore hole ø3,0	brass nickel-plated	110mm	**105-16A**
		160mm	**105-14A**
		260mm	**105-15A**

Extension nozzles, steel

Bent. Also available with rubber tip to protect surfaces.

Model	Material	Length	Order No.
Bore hole ø2,3	steel nickel-plated	110mm	**470-12**
Bore hole ø2,3, with Gummiaufsatz	steel nickel-plated	110mm	**470-72**
Spare part: Rubber tip	TPU		**470-44**

Safety and noise silencing extension nozzle „safetystar“

Bent star-shaped safety nozzle as extension nozzle. Avoids risks and dangers when handling the energy carrier `compressed air´ in particular in direct skin contact. Improved working conditions because of reduction of noise down to 80db(A) and below. It currently meets the following safety regulations and directives:

- Swiss Accident Insurance Fund (SUVA)
- BG Directive (Noise) Directive 2003/10/EC
- Noise-at-work legislation (TRLV-noise)
- BG Machinery Directive 2006/42/EC, EN12100
- OSHA Regulations

Model	Material	Length	Order No.
Bent, star-shaped	steel nickel-plated	120mm	**470-43**

Rates of flow

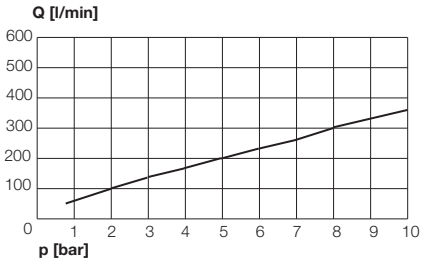

Sound level

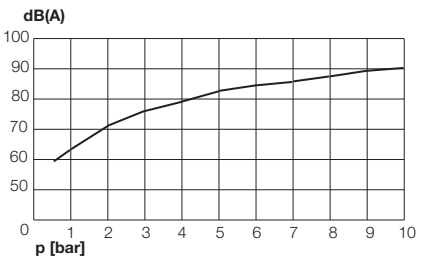

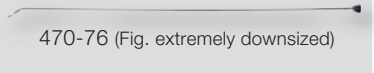

Special extension nozzles, steel

Extremely long.

Model	Material	Length	Order No.
Straight, bore hole ø2,3	steel nickel-plated	800mm	**470-76**
Bent, bore hole ø2,3	steel nickel-plated	800mm	**470-79**

Rates of flow - several nozzles

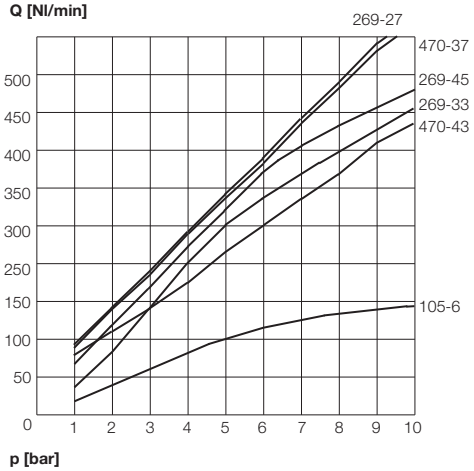

Technical data

Max. operating pressure (p_1)	10bar
Operating temperature	-10°C up to +50°C
Connection thread	M12x1,25

ООО "ПРОВЕРТ" www.prowert.ru info@prowert.ru +7 (495) 108-05-38

Extensions for blow guns

Stable extensions for all ewo blow guns. Available in a straight or bent version and also in 4 lengths. The extensions can be assembled with all nozzles with connection thread M 12 x 1,25 from the ewo range. All extensions can be combined with each other for an even larger selection of lengths. On the inlet they are equipped with a rotatable locking to adjust the tube with the nozzle properly. Bore hole ø 8 mm.
Benefit: Especially difficult and inconvenient areas can be reached easier. This allows a higher safety at work and a mor comfortable labour.
Material aluminum anodized.

Model	Length	Order No.
Straight	150 mm	**107-31**
	300 mm	**107-32**
	450 mm	**107-33**
	800 mm	**107-34**

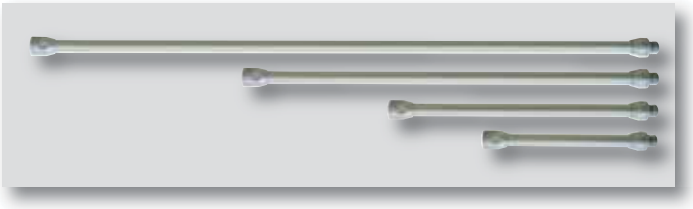

Model	Length	Order No.
Bent	150 mm	**107-61**
	300 mm	**107-62**
	450 mm	**107-63**
	800 mm	**107-64**

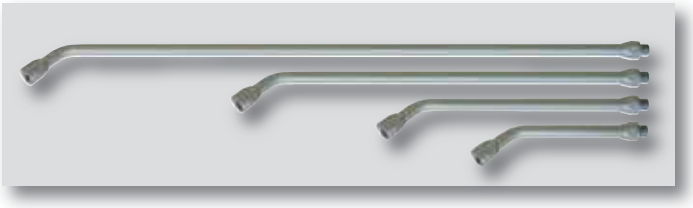

Combination example

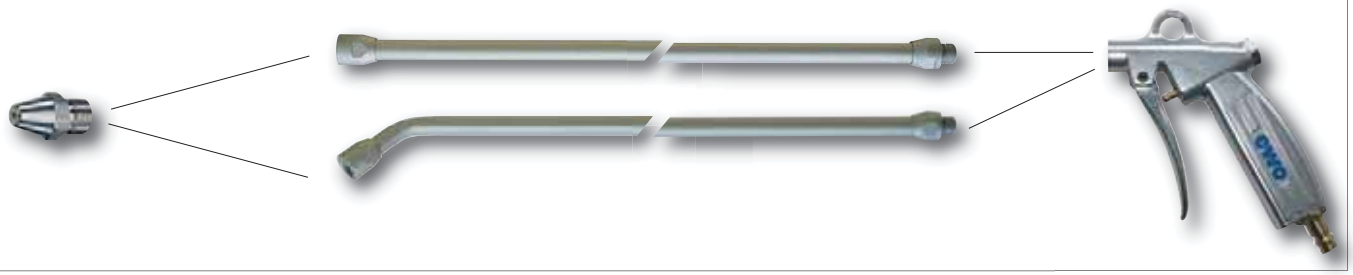

Technical data:

Max. operating pressure (p_1)		10 bar
Temperature range		-10 °C – +50 °C
Connection thread	Inlet:	M 12 x 1,25 a - rotatable until locked
	Outlet:	M 12 x 1,25 i - fixed
Material		aluminum anodized

Blow guns with “ewo” logo also available without logo, neutral

Special nozzles, accessory (nozzle attachments)

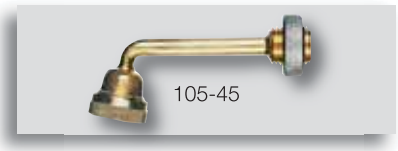

Bicycle nipples

To fill air tires of bicyles etc.. Can also be connected to hand tire inflators.

Model	Material	Connection	Order No.
Bent, with bicycle valve	brass	M12x1,25	**105-45**
		G 1/4a without knurled nut	**105-46**

Adjustable air-saving nozzle

Allows to adjust the air flow to all working conditions. At the same time energy costs and noise levels are reduced. Can be used as an additional equipment for all ewo blow guns. Can be combined with all nozzles of the ewo range.
2-part nozzle. The screwed-in nozzle is equal to a normal nozzle. Operating pressure max. 10 bar.

Model	Material	Length	Order No.
Color blue	aluminum (body) / POM (sleeve, nozzle and pin)	57 mm	**470-84**
Color black	aluminum (body) / POM (sleeve, nozzle and pin)	57 mm	**470-85**

Ordering option: Blow gun, mounted with adjustable air-saving nozzle (blue):
Order No. + **S** i. e.: 269.41S. (optionally with black model, please remark when ordering)

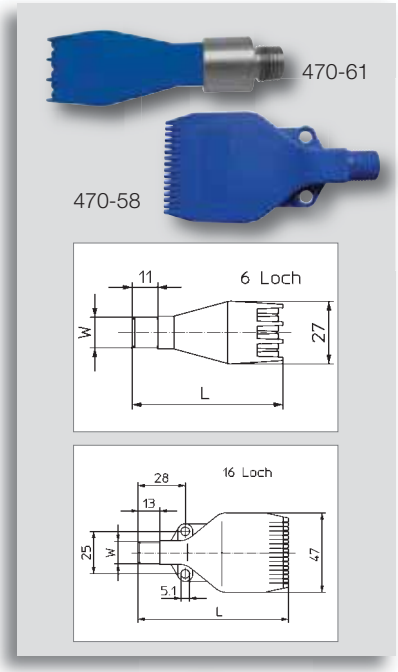

Safety flat-jet nozzles

Used as process nozzle (transport, cooling). With G 1/4 female thread. For use with an ewo blow gun (type 470 and 269) please order model **with** adapter. Max. operating pressure (p_1) 6 bar.

Model	Material	Length	Order No.
Narrow, 6 hole, with adapter M12x1,25	POM (nozzle) / aluminum (adapter)	57 mm	**470-61**
Wide, 16 hole, with adapter M12x1,25	POM (nozzle) / aluminum (adapter)	82 mm	**470-60**
Narrow, 6 hole, G 1/4 (no adapter)	POM	67 mm	**470-59**
Wide, 16 hole, G 1/4 (no adapter)	POM	103 mm	**470-58**
Spare part: Adapter G 1/4 i x M12x1,25 a	aluminum, colorless anodized		**470-62**

Protection shield

To be mounted between nozzle and gun.

Model	Material	Order No.
ø 70 mm	plastic (PE)	**269-15**

Blow gun pressure relief valve

The pressure relief valve is assembled directly on the blow gun outlet, just before the standard nozzle. With the built-in pressure regulating valve the blow-off pressure is reduced down to about 2,5 - 2,8 bar (depending on the primary pressure 1 to 10 bar). Benefits: Safety in blowing out, noise reduction and air savings.

Model	Material	Order No.
Connection M12x1,25	aluminum	**470-82**

Ordering option: Blow gun, mounted with pressure relief valve: Order No. + **B** (i. e.: 269.41**B**)

Volume pressure control valve

The adjustable pressure control valve is assembled on the blow gun inlet. It enables the regulation of compressed air and therefore a reduction of the blow out pressure. Reduced air flow and lower blow out pressure means reduced noise and lower costs for compressed air.

Model	Material	Order No.
Connection G 1/4	aluminum	**470-83**

12 Garage Equipment
ООО "ПРОВЕРТ" www.prowert.ru info@prowert.ru +7 (495) 108-05-38

Blowing sets, compressed air suction gun

Blowing sets “airclassic”, “airbasic”, “airprofi”

Complete sets, consisting of a blow gun (aluminum die-casting or plastic) with extension nozzle (steel), PU spiral hose (different lengths and qualities), ready mounted with self-reliefing coupling und coupling plug DN 7,2 (brass). Max. operating pressure for spiral hose: 8 bar at max. 50 °C. (Detailed description of spiral hoses see chapter 11, page 3.)

“airclassic”

Blow gun model	Spiral hose ø	Spiral hose length	Order No.
Aluminum die-casting	ø 69	3,5 m	**472.32**
	ø 69	6,0 m	**472.62**

“airbasic”

Blow gun model	Spiral hose ø	Spiral hose length	Order No.
Plastic	ø 69	3,5 m	**472.31**
	ø 69	6,0 m	**472.61**

“airprofi”

Blow gun model	Spiral hose ø	Spiral hose length	Order No.
Plastic	ø 60	3,0 m	**472.3**
	ø 60	6,0 m	**472.6**
Model with extension nozzle “safetystar”			
Plastic	ø 60	6,0 m	**472.2**

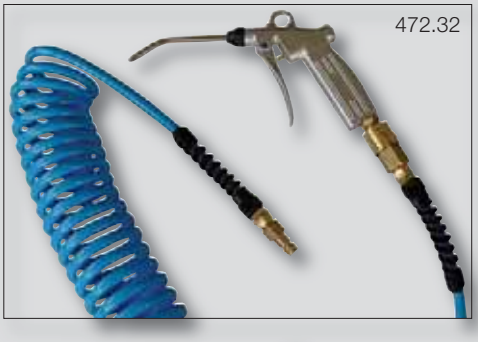

Blowing sets, compressed air connection from above

Blowing set consisting of blow gun (forged aluminum) with normal nozzle (aluminum), PU spiral hose (2 lengths), ready mounted with coupling and coupling plug DN 7,2 (brass). Max. operating pressure of spiral hose: 8 bar at max. 50 °C. (Detailed description of spiral hoses see chapter 11, page 3.)

Blow gun model	Spiral hose ø	Spiral hose length	Order No.
Forged aluminum	ø 69	3,5 m	**472.73**
	ø 69	6,0 m	**472.76**

Compressed air suction gun

For removing swarf, dust and dirt. Suitable for drying wide surfaces after modification. With suction pipe ø 25 mm, length 300 mm, suction hose, length 500 mm, and a dust bag. Coupling plug DN 7,2 added loosely. Material aluminum.

Article	Order No.
Compressed air suction gun, complete	**474.000**

Spare parts and accessories

Article	Order No.
Nozzle set, with rabbet and flat nozzle	**474.001**
Spare dust bag	**474.002**

Technical data

Medium	pre-filtered compressed air
Connection thread	G 1/4 a and coupling plug DN 7,2 (added loosely)
Max. operating pressure (p_1)	8 bar
Recommended operating pressure	4 - 8 bar
Flowrate at 6 bar	500 Nl/min
Operating temperature	-10 °C up to +50 °C
Weight	530 g
Hose length	500 mm
Suction pipe length	300 mm

Washing guns

High-pressure washing guns (in brass and aluminum for long life) can be connected to water pumps for working pressures up to 40 bar. Several models available: Regulated manually with a handwheel or as safety model with lever operation for `open´ and `shut´. The safety model is recommended for cooling liquids on machine centers. The jet can be adjusted from full jet to spray jet. Materialials brass or aluminum.

Washing guns

Nozzle ø2,0 mm. With regulating wheel. An other nozzle ø4 mm added loosely. Material brass.

Compressed air connection	Connection thread	Order No.
Hose tail	LW 13 (1/2")	**160.04**
	LW 19 (3/4")	**160.06**

Safety washing guns "multiclean"

Nozzle ø2,0 mm. With lever and regulating wheel. Material aluminum, brass-coloured anodized.

Compressed air connection	Connection thread	Order No.
Hose tail	LW 13 (1/2")	**404.04**
	LW 19 (3/4")	**404.06**
Coupling plug	DN 12 (model 254)	**404.03**
Female thread	G 1/2i	**404.30**

Safety washing guns "proficlean"

Nozzle ø2,0 mm. With lever and regulating wheel. Material aluminum, clear anodized.

Compressed air connection	Connection thread	Order No.
Hose tail	LW 13 (1/2")	**412.04**
	LW 19 (3/4")	**412.06**
Coupling plug	DN 12 (model 254)	**412.03**
Female thread	G 1/2i	**412.30**

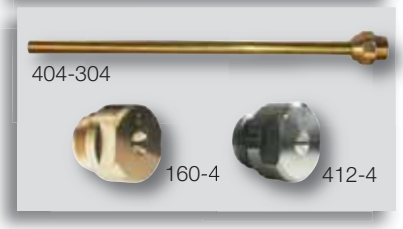

Spare parts and accessories

Article	Suitable for	Order No.
Spray nozzle ø2 mm, M21x1,5 with o-ring (mounted on mod. 160, 404)	models 160, 404	**160-4**
Spray nozzle ø4 mm, M21x1,5 with o-ring	models 160, 404	**160-4A**
Spray nozzle ø2 mm, M21x1,5 with o-ring (mounted on mod. 412)	model 412	**412-4**
Spray nozzle ø4 mm, M21x1,5 with o-ring	model 412	**412-5**
Extension with nozzle ø4 mm, length 300 mm	all models	**404-304**

Other bore hole-ø for spray nozzles available upon request (max. ø6 mm).

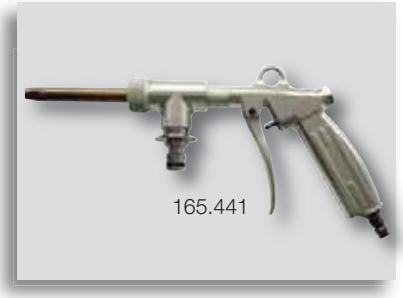

Safety washing guns "powerclean"

Nozzle ø6 mm. The washing gun "powerclean" is designed for the use with compressed air and/or water. The combination of compressed air and water allows highly effective cleaning. The regulating nozzle also enables a gentle cleaning of areas, where partial damages must be avoided (i. e. by the use of a high pressure washer). The nozzle design and the adjustable support from compressed air prevent the sprayed water from splashing back. Water consumption can be adjusted by turning the handwheel. Water withdrawal either from hose/pipe or tank (i. e. bucket). Material forged aluminum.

Water connection type	Compressed air connection	Order No.
G 3/8 male thread for direct hose connection	coupling plug DN 7,2	**165.241**
Plug for common water hose coupling systems (fig.)	coupling plug DN 7,2	**165.441**

Water flow rates / Sound level

Operating pressure [bar]	2	3	4	5	6	7	8	9	10
Water flow rate [l/min]	246	262	308	352	401	424	453	515	552
Sound level [db(A)]	83,4	83,8	82,4	80,9	84,5	87	89,3	92,3	94,8

Technical data

	models 160, 404	model 412	model 165
Max. operating pressure (p_1)	40 bar	20 bar (with nozzle Ø2 mm) / 25 bar (with nozzle Ø4 mm)	10 bar
Temperature range	+5 °C up to +90 °C	+5 °C up to +90 °C	+5 °C up to +50 °C

Water flow rates

l/min with different nozzles (valve completely opened).

Operating pressure [bar]	Model	4	6	10	16	20 (only mod. 412)	25 (only mod. 160, 404)	40
Nozzle ø2 mm	**412,**	4	5	6,3	8	10	10	13
Nozzle ø4 mm	**160/404**	16	20	25	32	40	40	50
Nozzle ø6 mm	**160/404**	36	45	56	72	-	90	112
Nozzle ø6 mm	**165**	36	-	56	-	-	-	-

ООО "ПРОВЕРТ" www.prowert.ru info@prowert.ru +7 (495) 108-05-38

Spray guns for low-viscous liquids

Spray guns for low-viscosity liquids. Compressed air connection with coupling plug DN7,2 for rapid-action coupling model 308 or with detachable hose tail. Body made of die-casting aluminum.

Spray guns “multispray”

Nozzle ø3,0mm.
Spray gun using the suction principle. i. e. for cold cleaners. Available with a fixed straight or a rotatable spray pipe. With spray container (plastic or metal) and detachable hose tail for hose connection.

Compressed air connection	Model	Spray pipe shape	Order No.
Coupling plug	with plastic bowl 0,7l	straight	**125.241**
	with hose tail DN6	straight	**125.363**
	with plastic bowlr 0,7l	rotatable 360°	**125.341**

Spare parts and accessories

Article	Order No.
Bowl 0,7l, synthetic material	**251-11**
Lid for bowl 0,7 l, synthetic material	**251-12**
Metal bowl complete (bowl with lid) 0,7l	**125-71**
Bowl metal 0,7l	**148-39**
Lid for bowl 0,7l, metal	**125-72**
Sealing ring material cork	**148-32**

Technical data

Max. operating pressure (p_1)	10bar
Recommended operating pressure	2-6bar
Operating temperature	+5°C up to +50°C
Spraying cone	approx. 40°
Regulating jet and bulk	rotate nozzle

Air consumption / capillary rise
at different operating pressures and spray pipes.

Operating pressure [bar]		2	3	4	5	6	7	8
Air consumption [m³/h (l/min)]	straight pipe	2,5 (42)	3,0 (50)	3,6 (60)	4,3 (72)	5,0 (83)	5,7 (95)	6,5 (108)
	rotatable pipe	3,2 (53)	4,2 (70)	5,2 (87)	6,3 (105)	7,4 (123)	8,5 (142)	9,6 (160)
Capillary rise [m]	straight pipe	4,0	5,5	6,5	7,0	6,5	5,5	4,0
	rotatable pipe	2,5	4,2	5,5	6,0	6,5	7,0	6,5

Spray gun

Nozzle ø0,7mm.
For spraying from the bottle or directly from the water pipe. Compressed air connection with detachable hose tail. Nozzle with spin insert. Handling by lever. Body forged aluminum.

Compressed air connection	Connection thread	Order No.
Detachable hose tail	G¼xLW6	**269.35**

Spare parts and accessories

Article	Order No.
Spray part complete (including nozzle Ø0,7)	**269-46**
Nozzle Ø 0,7mm (mounted)	**105-49**
Nozzle Ø 0,5mm	**105-50**

Technical data

Max. operating pressure (p_1)	10bar
Recommended operating pressure	1-6bar
Operating temperature	+5°C up to +50°C
Spraying cone	approx. 40°
Regulating jet and bulk	rotate nozzle

Water flow rates
With nozzle Ø 0,7mm - valve fully opened.

Operating pressure [bar]	1	2	3	4	5	6
Water flow [l/min]	0,18	0,21	0,24	0,27	0,3	0,33

Spray guns for low-viscous liquids

Spray guns for chassis

Spray pipe ø 6,0 mm.
A spray gun designed for spraying in the suction principle of underbody protection. Jet regulation by screwing in the spray tube. Detected with lock nut. Spray container of plastic, metal or tapped to support the standard dose of R40 cans, also hose nozzle for hose connections. Air Connection with coupling plug DN7,2 (model 308). Body made of die-casting aluminum.

Compressed air connection	Model	Order No.
Coupling plug	with plastic bowl 0,7 l	**355.511**
	with metal bowl 0,7 l	**355.521**
	with R40 thread for commercial cans	**355.531**

Spare parts and accessories

Article	Order No.
Bowl 0,7 l, synthetic material	**251-11**
Lid for bowl 0,7 l, synthetic material	**251-12**
Metal bowl complete (bowl with lid) 0,7 l	**125-71**
Bowl metal 0,7 l	**148-39**
Lid for bowl 0,7 l, metal	**125-72**
Sealing ring cork	**148-32**

Technical data

Max. operating pressure (p_1)	10 bar
Recommended operating pressure	2 - 8 bar
Operating temperature	+5 °C up to +50 °C
Adjustment	at spray pipe

Air consumption / capillary rise
At different operating pressures.

Operating press. [bar]		2	3	4	5	6	7	8	9	10
Air consumption	[m³/h]	246	262	308	352	401	424	453	515	552
	[l/min]	14,8	15,7	18,5	21,1	24,0	25,4	27,2	30,9	33,1
Capillary rise	[m]	2	3	4	5	6,5	7	6,5	6	5,5

ООО "ПРОВЕРТ" www.prowert.ru info@prowert.ru +7 (495) 108-05-38

Spray guns for highly viscous media

Spray guns “carprotect”

With pressure cup and adjusting screw.

Low-fog spray gun with pressure cup for thick (high-viscosity) sprays and extensions of any length with ball spray head. With this gun there is no dripping of the spray when interrupting work because a nozzle needle closes the opening of the spray nozzle. Strong one-liter aluminum cup with large filling hole. Even spraying of the thick (high-viscosity) undercarriage-seal (wax-based or bitumen- based), with a working pressure of about 6 bar and an air-flow of about 19 m³/h or 315 l/min. Spraying of normal, thin spray is carried out on this spray gun with a working pressure of approx. 5 bar and an air-flow of approx. 17 m³/h or 285 l/min.
Economical use is achieved by enveloping the spray jet in a cone of air. Easy and safe for working personnel. When using as a spray gun pull the lever slightly.
Strong and yet light-weight construction, ideally suitable for garage work to protect against corrosion. Air connector with G 1/4 detachable hose tail for hoses 5-6 mm, or with plug for rapid-action coupling. Body made of forged aluminum.

Compressed air connection	Connection thread	Model	Order No.
Coupling plug	DN 7,2	with pressure cup 1 l	**318.11**
Detachable hose tail	G 1/4 x DN 6	with pressure cup 1 l	**318.10**

Spare parts and accessories

Article	Length	Order No.
Extension with ball jet nozzle	700 mm, ø 4 mm	**318.006**
	700 mm, ø 6 mm	**318.000**
	1500 mm, ø 6 mm	**318.005**
Pressure cup, metal 1,0 l		**318-36**
Sealing ring		**318-40**

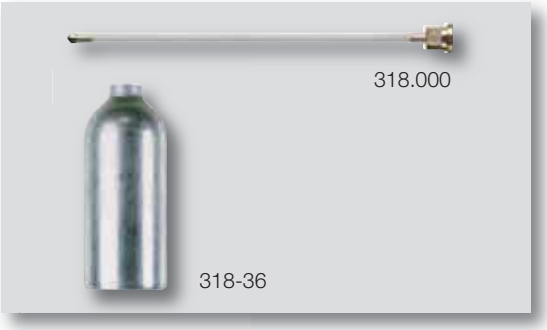

Technical data

Max. operating pressure (p_1)	10 bar
Recommended operating pressure	3 - 6 bar
Operating temperature	+5 °C up to +50 °C
Air comsumption	285 l/min (5 bar)
Weight	1500 g

Compressed air cartridge gun

The cartrigdge gun works using compressed air and is suitable for using customary 310 ml plastic cartridges for sealing, grooving and connecting with silicone or acrylic sealing compounds. Body made of forged aluminum.

Compressed air connection	Connection thread	Model	Order No.
Coupling plug	DN 7,2	with cartridge	**340.41**

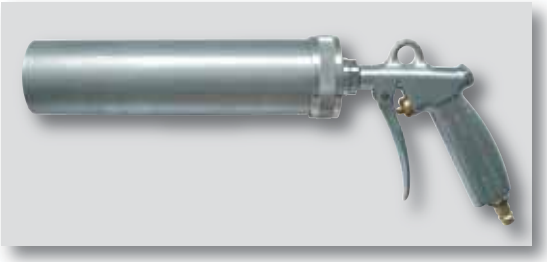

Technical data

Max. operating pressure (p_1)	8 bar
Recommended operating pressure	2 - 6 bar
Operating temperature	+5 °C up to +50 °C
Air comsumption	60 l/min
Weight	660 g

ООО "ПРОВЕРТ" www.prowert.ru info@prowert.ru +7 (495) 108-05-38

Sand blasting gun

390.12

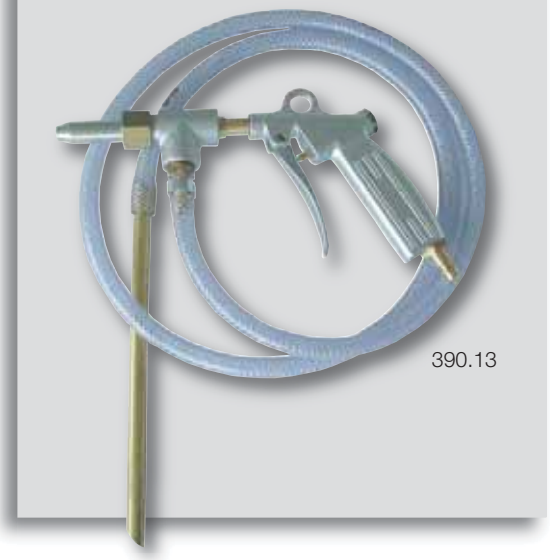
390.13

For removing rusted areas that cannot be easily reached by a grinder or other equipment our sand blasting gun is just the right tool. Whether it´s question of little rusty places on cars and other vehicles or machines, they will pose no problem for our sand blasting gun. In the shortest time the largest rusted places will disappear so that any priming paint will again adhere. Repainting or galvanic treatment is possible only after sand blasting. Body made of die-casting aluminum.

Sand blasting guns

Compressed air connection	Connection thread	Model	Order No.
Coupling plug	DN7,2	with plastic bowl 0,7l	**390.12**
Coupling plug	DN7,2	with suction hose 1,5m	**390.13**
Detachable hose tail	G1/4xLW6	with plastic bowl 0,7l	**390.11**

251-12

251-11

Spare parts and accessories

Article	Order No.
Bowl 0,7l, synthetic material	**251-11**
Lid for bowl 0,7l, synthetic material	**251-12**
Nozzle ø4mm, hardened, zinc-plated	**390-2**
Hose complete, 1,50m, 15x9, PVC	**390-6**

Technical data

Max. operating pressure (p_1)	10bar
Recommended working pressure	4-7bar
Operating temperature	0°C up to +50°C
Distance to working piece	30cm
Plastic bowl (content)	ca. 1,0kg
Nozzle ø (hardened)	4mm
Abrasives	0,1-0,8mm
Preferred abrasives	mineral or natural disposable abrasive. Shape and grain size depends on the base material and texture.

Air consumption / capillary rise

At different operating pressures., With nozzle ø4mm

Operating press. [bar]	2	3	4	5	6	7
Air consumption [m³/h]	6,7	9	10,8	13,5	16,5	19,5
[l/min]	112	150	180	225	275	325
Capillary rise** [m]	2,7	3	2,7	2,3	1,7	1,2

*The stated capillary rises are valid for water. For quarry sand the capillary rise is about 50%.

ООО "ПРОВЕРТ" www.prowert.ru info@prowert.ru +7 (495) 108-05-38

HVLP Paint spray guns, mixing cup system

HVLP Paint spray gun “minipaint”, in a case

Compact and handly spray gun CE as a mist reduced and and enviromentally friendly HVLP version with high colour transfer rate (>70 °) with a low flow operating pressure (2,0 - 2,5 bar) at the same time. Equipped with stainless steel nozzle components for processing water-based paint. Especially suitable for smaller surfaces, partial painting of vehicles as well as a wide range of decorative painting work. Quality an precision accuracy paired with optimal ergonomics guarantee perfect results..

Advantages of the HVLP system:

- Excellent surface finish
- Multi-purpose application possibilities in automotive, metal and wood crafting as well as in the industries
- Compliance with legal reguirements (VOC)
- Low consumption of paint
- Marginal emissions
- High level of utilisation

RECOMMENED AIR DURING USE FOR STM HVLP: 2 BAR

At the recommended air pressure the spray gun respects the European and U.S. ecological norms for which the transfer efficiency must be above 65 % and /or the air pressure at the exit of the air cap must not be superior to 0,7 bar (10 psi).

Article	Order No.
Paint spray gun set in plastic case Content: Paint spray gun (compr. air connection G 1/4), with nozzle ø 0,7 mm, 2 gravity cups (plastic) 75/250 ml, spare part set (seals and springs), nozzle key, cleaning kit, G 1/4 - steel coupling nipple, care oil.	**250.00**

Spare parts and accessories

Article		Order No.
Nozzle set, containing air cap (steel) - nozzle - needle	ø 0,7 mm	**250-8**
	ø 1,0 mm	**250-9**
	ø 1,2 mm	**250-10**
Flow regulator 2 bar (air throttle valve) for exact adjustment of working pressure		**250.01**
Spare part set (seals and springs)		**250-13**
Gravity cup complete with lid, plastic, connection thread M8x0,75	250 ml	**250-14**
	75 ml	**250-15**

Technical data

Control range (p_2)	2,0 - 2,5 bar / 28,6 - 35,8 psi
Max. material temperature	40 °C
Air consumption at 2 bar	90 - 100 l/min
Material	
- colour nozzle and colour needle	stainless steel
- gun body	aluminum die-casting, chemical nickel-plated and polished
- bowl and lid	PE
Weight (complete set)	1690 g

Mixing cup system

To mix, fill and store lacquers. The insert can be sealed by lid. Available in 2 sizes.

Article	Mixing capacity	PU	Order No.
Mixing cup (polypropylene (PP))	920 ml	1	**250.50**
	1850 ml	1	**250.51**
Cup insert (polypropylene (PP))	920 ml	25	**250-30**
	1850 ml	25	**280-31**
Lid to close the cup insert	920 ml		**250-32**
	1850 ml		**250-33**

HVLP Paint spray guns

HVLP Paint spray gun “smartpaint”, in a case

New ergonomic and versatile HVLP spray gun, which fell particularly by the issue of paint mists prevail. This spray gun is ideal for touch up work in the body region such as spot repair as well as graphic and decorative applications.

Advantages of the HVLP system:

- Excellent surface finish
- Multi-purpose application possibilities in automotive, metal and wood crafting as well as in the industries
- Compliance with legal reguirements (VOC)
- Low consumption of paint
- Marginal emissions
- High level of utilisation

RECOMMENED AIR DURING USE FOR STM HVLP: 2 BAR

At the recommended air pressure the spray gun respects the European and U.S. ecological norms for which the transfer efficiency must be above 65 % and /or the air pressure at the exit of the air cap must not be superior to 0,7 bar (10 psi).

Article	Order No.
Paint spray gun set in plastic case Content: Paint spray gun (compr. air connection G 1/4), with nozzle ø 1,0 mm, 2 gravity cups plastic) 75/180 ml, spare part set (seals and springs), nozzle key, cleaning kit, G 1/4 - steel coupling nipple, care oil.	**250.11**

Spare parts and accessories

Article		Order No.
Nozzle set, containing air cap (steel) - nozzle - needle	ø 0,7 mm	**250-8**
	ø 1,0 mm	**250-9**
	ø 1,2 mm	**250-10**
	ø 1,4 mm	**250-49**
Flow regulator 2 bar (air throttle valve) for exact adjustment of working pressure		**250.01**
Spare part set (seals and springs)		**250-50**
Gravity cup complete with lid, plastic, connection thread M 12 x 1	75 ml	**250-51**
	180 ml	**250-52**
	500 ml	**250-20**

Mixing cup system see page 29

Technical data

Control range (p_2)	2 bar / 28,6 psi
Max. material temperature	40 °C
Air consumption at 2 bar	145 - 170 l/min
Material	
- colour nozzle and colour needle	stainless steel
- gun body	aluminum die-casting, chemical nickel-plated and polished
- bowl and lid	PE
Weight - gun without bowl	270 g
- set complete	1.270 g

ООО "ПРОВЕРТ" www.prowert.ru info@prowert.ru +7 (495) 108-05-38

HVLP Paint spray guns

HVLP Paint spray guns “paintprofi”, in a case

HVLP SYSTEM is the solution to combine quality and reliability with economy at the same time meeting the environmental regulations. Spray gun for the application of primers and paints in body shops; compact and light, they are particularly suitable for any paint products in industry and wood processing. Equipped with stainless steel nozzle set for use of waterbased paints. Easy to use, with a transfer efficiency (>80%), these features allow product saving together with an excellent application. The ergonomics and the lightness, together with the sought-after mould nowadays make this spray gun one of the most agile and reliable of its sector.
Available in 2 versions: With gravity cup (standard) or with pressure cup system.

Advantages of the HVLP system:
- Excellent surface finish
- Multi-purpose application possibilities in automotive, metal and wood crafting as well as in the industries
- Compliance with legal reguirements (VOC)
- Low consumption of paint
- Marginal emissions
- High level of utilisation

RECOMMENED AIR DURING USE FOR STM HVLP: 2 BAR
At the recommended air pressure the spray gun respects the European and U.S. ecological norms for which the transfer efficiency must be above 65 % and /or the air pressure at the exit of the air cap must not be superior to 0,7 bar (10 psi).

Article	Order No.
Paint spray gun set “standard”, in plastic case Content: Paint spray gun (compr. air connection G 1/4), with nozzle ø1,3 mm, gravity cup (plastic) 500 ml, spare part set (seals and springs), nozzle key, cleaning kit, G 1/4 - steel coupling nipple, care oil.	**250.41**
Paint spray gun set with pressure cup system, in plastic case Content: Paint spray gun (compr. air connection G 1/4), with nozzle ø1,3 mm, pressure cup system, spare part set (seals and springs), nozzle key, cleaning kit, G 1/4 - steel coupling nipple, care oil.	**250.91**

Spare parts and accessories

Article		Order No.
Nozzle set, containing air cap (steel) - nozzle - needle	ø1,3 mm	**250-2**
	ø1,5 mm	**250-3**
	ø1,7 mm	**250-4**
	ø1,9 mm	**250-5**
	ø 2,2 mm	**250-6**
Flow regulator 2 bar (air throttle valve) for exact adjustment of working pressure		**250.01**
Pressure cup system, (gravity cup complete 0,68 l, pressure regulator, flow regulator)		**250.02**
Spare part set (seals and springs)		**250-19**
Gravity cup complete with lid, plastic, connection thread M12x1	500 ml	**250-20**
Paint sieve, plastic (PA)		**250-21**

Mixing cup system see page 29

Technical data

Control range (p_2)	2 bar / 28,6 psi
Max. material temperature	40 °C
Air Consumption at 2 bar	200 l/min (6,6 cfm)
Material	
- colour nozzle and colour needle	stainless steel
- gun body	aluminum die-casting, chemical nickel-plated and polished
- bowl and lid	PE
Weight (set complete)	1600 g

Painting set, filter regulating stations

Painting Set

Consisting of pre-filter, micro-filter (variobloc series), HVLP paint spray gun and hose.
Multi-stage air purification unit with high-quality filter elements for optimum paint. Available with 2 diffferent HVLP spray guns as an option. Air quality acc. to ISO 8573.1.
Application range: Sand blasting and chemical plants, plastics and packaging industry and manufacturing base.

Components:

- **Paint filter unit:** *Filter pressure regulator* variobloc G 1/2 with metal bowl and semi-automatic drain valve, filter element 5 microns),; *micro-filter* (filtration efficiency 99,999 % based on 0,01 µm), *distribution block* with 2 couplings (5 pressure disposals)). Wall mount incl. (2 pcs.).
- **HVLP Paint spray gun:** "minipaint" or "paintprofi" (in plastic case with accessories).
- **Painting and air hose:** 8 m, mounted with coupling and plug DN 7,2).

Model	Order No.
Painting set "minipaint" (with paint filter unit, HVLP Paint spray gun, air hose)	**250.001**
Painting set "paintprofi" (with paint filter unit, HVLP Paint spray gun, air hose)	**250.002**
Single components:	
Paint filter unit variobloc (with pre- and micro-filter)	**250.003**
Paint filter unit variobloc (with pre- micro- and activated carbon filter)	**250.004**
HVLP Paint spray gun minipaint complete, in a case	**250.00**
HVLP Paint spray gun paintprofi complete, in a case	**250.41**
Painting and air hose complete	**E40500**

Technical data and further informations:

- For paint filter unit variobloc:	see chapter 4, individual units
- For paint spray gun:	siehe pages 29 + 31
- For painting and air hose:	see chapter 11, page 6

Filter regulating stations "microair" for coating sector

Multi-stage compressed air preparation system with high-quality filter elements (pre-filter, micro-filter and, if needed, activated carbon-filter) for optimal paint results, avoiding (rendering unnecessary) costly retouching work and preventing operational failure. Removes contamination such as H2O, CO, CO2, hydrocarbons and dust particles. High flow-rate (3000 Nl/min) with differential pressure gauge as an individual indicator of the degree of contamination. Provides optimal economic efficiency, service and safety. **Air quality according to ISO 8573.1 - Class 1.**
Application range: Sand blasting and chemical plants, plastics and packaging industry.

Construction and components:

Stage One - Pre-filter
Finely sintered bronze filter, 5 µm filtration, for filtering solids and liquids, filtration efficiency 99 %, (reusable after washing). With automatic drain valve A.

Stage Two - Pressure regulator
Independent of primary pressure with increased precision, without air consumption, regulates the desired operating pressure from 0,5 to 10 bar.

Stage Three - micro-filter
Multi-layered deep-bed filter with three-dimensional filtration by borosilicate fibrous web with high-capacity dirt-absorption. For fine filtration of solid particles in compressed air and oilwater aerosols up to a residual oil content of 0,01 mg/m³. Chemically and biologically inactive, water-resistant. Stainless steel protective case and and aluminum cover. Filtration efficiency 99,99998 % at 0,01 µm. Tested and approved according to LPV 0.700.9900 (Fraunhofer Instititute).

Distributor
For air extraction. Available with 2 ball valves or 2 couplings.

Model		Order No.
Pre-filter – pressure regulator – micro-filter	- **with distributor with 2 ball valves** G 3/8	**439.2**
	- **with distributor with 2 couplings** DN 7,2	**439.3**

Brackets mounted.

Accessory

Stage Four - activated carbon filter

With the completion set **activated carbon filter + distributor** you can complete your filter-regulation station.
Your benefit: Breathing-air quality with significantly less contamination than the surrounding air.
The completion set can be assembled with a double nipple (185.77) to No. 439.2 or No. 439.3.

Activated carbon filter Multi-layered activated carbon for the absorption of vaporized liquids and hydrocarbons (oilaerosols, odours). Residual oil content 0,005 ppm.

Article	Order No.
Activated carbon filter + distributor with 2 couplings DN 7,2 **with gauge** 0-16 bar	**439.4**
Double nipple for assembling to No. 439.2 or to No. 439.3	**185.77**

Specifications and parts "microair" see chapter 2 page 8

ООО "ПРОВЕРТ" www.prowert.ru info@prowert.ru +7 (495) 108-05-38

Terms and Conditions

§ 1 General

These supply and payment conditions only apply to the business transactions with entrepreneurs mentioned under § 310 section 1 BGB as well as to legal entities under the Public Law or special properties governed by the Public Law.

All the offers, order confirmations, deliveries and services are based on these conditions and special contractual agreements, if any. Deviating purchase conditions of the ordering party / customer shall not be included in the contract even with the acceptance of the contract.

A contract shall become effective with a special agreement after getting the written or telephonic order confirmation from the supplier. This shall also apply to amendments, modifications or subsidiary agreements. With the issuance of the invoice, the order shall be considered as confirmed.

These terms and conditions shall also apply to all the future business relationships, although these are not expressly agreed upon again.

Any acknowledgement from the side of the customer referring to his own business or purchase conditions will be hereby expressly rejected.

Any deviations from these conditions shall become effective only if the supplier confirms these in writing.

The supplier's offers will be subject to changes. The order number or item number will be based on the latest version of the supplier's documents such as catalogues or brochures, which also put forth further technical specifications. The right to make technical changes is expressly reserved. We do not give any guarantee for a precise compliance with the unit weights, dimensions and output data partially given in the catalogue.
If, upon the conclusion of the contract, it is detected that the supplier's claim for return service may not be fulfilled due to lack of efficiency on part of the customer - particularly because the latter has exceeded the credit limit or has not settled invoices that are long overdue - the supplier will have the right to refuse the fulfilment of the contract till the customer offers return services or gives guarantee of their fulfilment. The supplier will have the right to withdraw from the contract if the customer fails to provide the return services or fulfil the obligation of providing security even after the expiry of a reasonable term.

§ 2 Pricing and payment

The prices mentioned by the supplier in his offers are subject to changes. Unless mentioned otherwise in the order confirmation, the prices shall be applicable ex-works / ex-warehouse exclusive of the packing, postage, freight costs, other shipping costs, insurances and customs duty. These costs will be invoiced separately. The packing will be invoiced at the cost price. It will not be taken back. The legally applicable VAT is not included in the supplier's price. It will be invoiced separately according to the official rate.

All the invoices of the supplier shall be payable in Euro at the paying office of the supplier within 30 days from the date of invoice, net without deductions or within 14 days from the date of invoice after the deduction of 2% discount. No discount shall be applicable if the purchase price receivables from previous invoices are still pending.

Notwithstanding a deviating clause of the customer, the supplier will have the right to first offset the incoming payments against the previous dues. If costs and interests have already been incurred, the supplier will have the right to offset the payments first against the costs, then interests and finally against the main service.

If the customer does not make the payment in time, or if the supplier gets to know of some other circumstances, which question the creditworthiness of the customer, then the supplier has the right to collect the remainder of the debt or to demand security.

Cheques and bills will be accepted as payment, however bills only after prior agreement.

§ 3 Offsetting

The customer can exercise the right to withhold payments or offset them against counter-claims only if the claims raised by him are undisputed or established as final and absolute.

§ 4 Delivery period, delay in delivery

The delivery period is determined on the basis of the agreements between the contractual parties. The supplier will be able to comply with the delivery deadline only if all the commercial and technical issues between the parties to the contract are clarified and the customer has fulfilled all his obligations, e.g. procurement of the required official certificates or approvals, rendering of service or payment of the invoices. If these pre-requisites are not fulfilled, the delivery period shall be extended reasonably. However, this shall not apply if the supplier is in arrears.

The compliance with the delivery deadline on our part will depend upon correct and punctual delivery by our supplier. If delays are apparent, the supplier must inform the customer as soon as possible.

It is considered that the delivery deadline has been complied with, if the delivery object has left the supplier's factory before the expiry of this deadline or if the supplier has notified the readiness for shipping on his part. If the delivered goods must undergo an acceptance procedure, the date of acceptance shall be decisive, or alternatively, the notification of the readiness for acceptance, except in the event of justified rejection of acceptance.
If the delay in the dispatch or acceptance of the delivery object is due to reasons, for which the customer is responsible, he is charged for the costs incurred due to the delay, beginning with the month after the notification of the dispatch or readiness for acceptance.

If the non-compliance with the date of delivery is caused by acts of God, industrial disputes or other events, which lie outside the area of influence of the supplier, the delivery period shall be extended reasonably. The supplier shall communicate the time of commencement and conclusion of such circumstances to the customer as soon as possible.

The customer can withdraw from the contract without giving notice if the supplier is unable to provide the services completely before the transfer of risk. The customer can also terminate the contract if the supplier is unable to deliver a part of the consignment and if the customer has a justified interest in rejecting the partial delivery. If not, the customer shall pay the contract price for the partial delivery. This shall also apply in the event of incapacity of the supplier to make the delivery. For the rest, § 8 shall apply.

If the incapacity or impossibility on part of the supplier is due to the delay in acceptance or if the customer is solely or largely responsible for the same, he shall be liable to provide return service.

If, after taking into account the legal exceptions, the customer extends the term for the provision of services reasonably (after the expiry of the original term), and if the supplier fails to comply with this term too, the customer shall have the right to withdrawal within the framework of the legal guidelines.

Other claims resulting from the delayed delivery are determined exclusively in conformance with § 8 of these conditions.

§ 5 Transfer of risk, acceptance

The transfer of risk to the customer takes place when the delivery object leaves the plant / warehouse, also in the event of partial deliveries, or even when the supplier assumes other services, e.g. shipping costs or delivery and installation. If an acceptance procedure has to be carried out, this is decisive for the transfer of risk. This process must take place immediately on the planned date of acceptance, alternatively after the supplier gives the notification of readiness for acceptance. The customer may not reject acceptance if there are no major faults / defects.

In the event of delay or failure of the dispatch or acceptance on grounds, for which the supplier is not responsible, the risk will be transferred to the customer from the day of notification of the dispatch or readiness for acceptance on part of the supplier. If the customer demands, the supplier shall take out the insurances at the cost of the customer.

Part deliveries may be made, but only if the customer finds these reasonable.

§ 6 Retention of title

The delivered goods shall remain the property of the supplier till the customer pays all the liabilities resulting from this business relationship.

As the manufacturer, the supplier shall be responsible for processing and altering the goods, though not liable. If the co-ownership of the supplier expires due to amalgamation, it is agreed that the co-ownership of the customer on the common object shall be transferred to the supplier depending upon the corresponding percentage value of the invoice. The customer shall preserve the ownership or co-ownership of the supplier free of cost.

The customer shall preserve and protect the ownership / co-ownership of the supplier against deterioration, mitigation or loss with utmost care, like an orderly businessman.

The customer has the right to process and sell the goods subject to retention of title during a regular business transaction. However, he does not have the right to pledge the goods or transfer them by way of security. The customer shall assign the receivables earned by him from the resale of goods subject to retention of title or from any other legal grounds pertaining to these goods completely to the supplier by way of security, along with all the ancillary rights.

If third parties are given access to the goods subject to retention of title, the ownership right of the supplier on these goods is brought to the notice of the customer and the supplier is informed immediately of this interference. The customer shall bear the costs incurred and compensate for the resultant damages.

In the event of default of payment on part of the customer, the supplier will have the right to withdraw from the contract and take back the goods at the customer's cost or, if required, demand an assignment / transfer of the handover claims of the customer against the third party. The supplier's right to demand compensation of damages shall remain unaffected. This shall also apply if the customer carries out activities contrary to the contract.

If the customer demands, the supplier shall release the securities at his disposal such that the realisable value of his remaining securities exceeds the receivables to be secured by more than 20%. The supplier decides which securities he will release.

If the customer behaves contrary to the terms of the contract, particularly if he is default of payment, the supplier is entitled to take back the delivered goods after sending a corresponding reminder. In that case, it is obligatory for the customer to hand over the goods.

If the customer files an application for initiating insolvency proceedings, the supplier shall have the right to withdraw from the contract and demand immediate handover of the delivery object.

§ 7 Claims for defects

Excluding all the other claims, the supplier gives the guarantee for material defects and defects of title, subject to § 8.

Material defects
The supplier shall repair or replace all parts that are proved as defective due to certain circumstances prevalent before the transfer of risk, as per the supplier's discretion. The customer shall immediately notify the supplier in writing of such defects. The replaced parts will be the property of the supplier.

The customer shall discuss with the supplier and agree upon a specific period and provide him with the requisite facilities for the apparent repairs or replacement deliveries to be made; if the customer fails to do so, the supplier will not be liable for the consequences. However, in cases of extreme emergency, when the operational safety is at risk or there is a possibility of an even greater damage, whereby the supplier must be immediately informed, the customer has the right to eliminate the defect himself or involve the services of a third party and demand compensation of the expenses incurred from the supplier.

Return deliveries of goods should be generally free; freight forwarded consignments will not be accepted. If reclamation is justified, the postal charges are compensated.

The supplier shall bear the direct costs for the repairs or replacement delivery and, if the claim is justified, also the costs for the replacement as well as the shipping costs. Besides, the supplier shall bear the installation and dismantling costs, the costs required for the provision of the corresponding technicians and assistants and transportation costs, provided that this does not put an unreasonably high burden upon the supplier.
Within the framework of the legal guidelines, the customer has the right to withdraw from the contract if the supplier fails to carry out the repair operations or make the replacement delivery following a material defect within the reasonable term assigned for this purpose (whereby the legal exceptions will be taken into account). If the defect is insignificant, the customer only has a right to reduce the contract price. In all other cases, the right to reduce the contract price is excluded.

Other claims are specified in § 8 of these terms and conditions.

The supplier does not give any guarantee for the delivered goods in the event of:

Inappropriate use, incorrect assembly or commissioning by the customer or a third party, natural wear, faulty or careless handling, inappropriate maintenance, unsuitable operating resources, chemical, electro-chemical or electric influences, provided that the supplier is not responsible for the same.

If the repair operations are undertaken by the customer himself or by a third party, the supplier shall not assume any liability for the consequences.

The same shall apply if the customer makes changes to the delivery object without the prior consent of the supplier.

Defects of title
If the use of the delivery object leads to a violation of the industrial property rights or copyrights within the country, the supplier shall, at his own cost, procure and grant the customer the right to further use or modify the delivery object (in a manner reasonably acceptable to the customer), so that there is no violation of the industrial property rights.

If this is not possible under economically reasonable conditions or within a reasonable period of time, the customer is entitled to withdraw from the contract. Under the given pre-requisites, the supplier also has the right to withdraw from the contract.

Moreover, the supplier shall exempt the customer from undisputed or legally ascertained claims of the respective proprietor.

The obligations of the supplier mentioned in §7, pt. 7 are subject to § 8, pt. 2 with respect to the violation of the industrial property right or copyright.

These obligations are valid if

- the customer immediately notifies the supplier of the asserted violations of industrial property rights or copyrights,
- the customer supports the supplier to a reasonable extent in the process of warding off the asserted claims or the supplier allows the modification measures as defined under § 7, pt. 7,
- all the defence measures including out-of-court settlements remain reserved for the supplier,
- the defect of title is not the result of a direction of the customer and
- the infringement was not because of an unauthorised modification made by the customer to the delivery object or an inappropriate use (not in conformance with the contractual terms) of the object.

§ 8 Liability

If the customer is unable to use the delivery object in conformance with the contract due to a fault on part of the supplier, e.g. as a result of incomplete or wrong suggestions and consultation offered before or after the conclusion of the contract or due to the violation of other incidental contractual obligations (particularly of the operating and maintenance instructions for the delivery object), the terms mentioned under §§7 and 8, pt. 2 shall apply accordingly under exemption of other claims of the customer.

The supplier shall assume the liability for damages that are not directly caused to the delivery object (on any legal grounds whatsoever) only under the following circumstances:
- purposeful act
- gross negligence on part of the owner / institution or managerial employee
- if there is culpable injury to life, physical injury or damage to health
- if defects are found in the delivery object, which the supplier has hidden with malicious intent or whose absence he had guaranteed in writing
- if defects are found in the delivery object, for which liability must be assumed in conformance with the Product Liability Law in the event of damage to life or property during the private use of objects.

In the event of culpable violation of important contractual obligations, the supplier shall also assume the liability for negligence as well as gross negligence on part of the non-managerial employees, for the former case limited to the reasonably foreseeable damages typical to the contract.
No other claims are valid.

§ 9 Statute of limitation

All claims raised by the customer, resulting from any legal grounds whatsoever, shall expire in 12 months. For damage compensation claims as mentioned under § 8, pt. 2a-e, the legal terms shall apply.

§ 10 Confidentiality

The customer shall handle all the information, know-how and other business secrets revealed to him in the course of execution of the respective order in a strictly confidential manner. He shall not forward any information, drawings, sketches or other documents or make these accessible to a third party without the express consent from the supplier.

§ 11 Industrial property rights, usage right and patent rights

As long as the supplier manufactures goods on the basis of an order as per the instructions and guidelines given by the customer and delivers these to the customer, the customer shall guarantee the supplier that the goods and services provided by him will not lead to an infringement of the industrial property rights of third parties. The customer shall exempt the supplier from all the third-party claims and compensate for the damages borne by him.

If the supplier provides the customer with tools, proposals for installation, drawings or other documents along with the goods, he shall retain the ownership of these as well as all the industrial property rights and usage right. The customer may use these only within the scope of the agreement to sale. However, he shall not have the right to reproduce such objects or make these accessible to third parties.

§ 12 Final clauses

The supplier has the right to store and process all data about the customer acquired in the process of development of contract for his own purpose under observance of the Federal Data Protection Act.

If individual clauses of this contract are rendered ineffective, the parties to the contract shall replace the ineffective clause with a clause that comes closest to fulfilling the commercial aim strived at with the former clause.

The Court of jurisdiction is Stuttgart.

Unless specified otherwise in the order confirmation, the place of fulfilment will be the business location of the supplier.

All the legal relationships between the supplier and the customer shall be governed by the German Law.

Armaturen- und Autogengerätefabrik ewo
Hermann Holzapfel GmbH & Co. KG

Hessbruehlstrasse 45-47
70565 Stuttgart
GERMANY

Fon: +49 711 7813 0
Fax: +49 711 7813 200

info@ewo-stuttgart.com
www.ewo-stuttgart.com

www.ewo-stuttgart.com

ООО "ПРОВЕРТ" www.prowert.ru info@prowert.ru +7 (495) 108-05-38