Performance Series

WTO
Higher Productivity

ISO 9001

The New Standard Series

designed for highest performance

ООО "ПРОВЕРТ" www.prowert.ru info@prowert.ru +7 (495) 108-05-38

TÜV CERT

CERTIFICATE

The TÜV CERT Certification Body
of TÜV Management Service GmbH
certifies in accordance
with TÜV CERT procedures that

WTO-Werkzeug-Einrichtungen GmbH
Auf der oberen Au 45
D-77797 Ohlsbach

has established
and applies a quality system for

Driven Precision Tools

An audit was performed, Report No. QM-M-98/606
Proof has been furnished that the requirements
according to
DIN EN ISO 9001:1994
are fulfilled.

Certificate Registration No. 70 100 M 606

TGA-ZM-18-96-00

Mannheim, August 28

TÜV MANAGEMENT SERVICE

TÜV CERT Certification Body
of TÜV Management Service GmbH
Unternehmensgruppe TÜV Süddeutschland

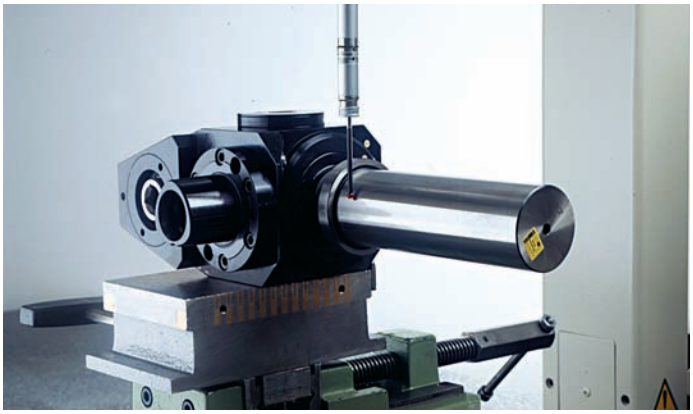

Performance Series is the new standard program from WTO, developed for high cutting performance. Optimal for each turning centre, this program combines innovative technology and top quality.

The higher cutting performance of the Performance Series provides an enormous cost saving potential by reducing cycle time for drilling and milling. Through this, your machine will achieve higher productivity.

WTO continues to be the benchmark for quality in the industry. In 1994 WTO became the first manufacturer of driven precision tooling to achieve ISO 9001 certification.

Other standard tooling for mill/turning centers available from WTO:

WT System

The New Generation!

driven tools with interchangeable
presetable spindles

Coromant Capto®

Fastest Time Wins!

driven tools with quick change
for highest productivity

© WTO GmbH • Subject to change without notice.

ООО "ПРОВЕРТ" www.prowert.ru info@prowert.ru +7 (495) 108-05-38

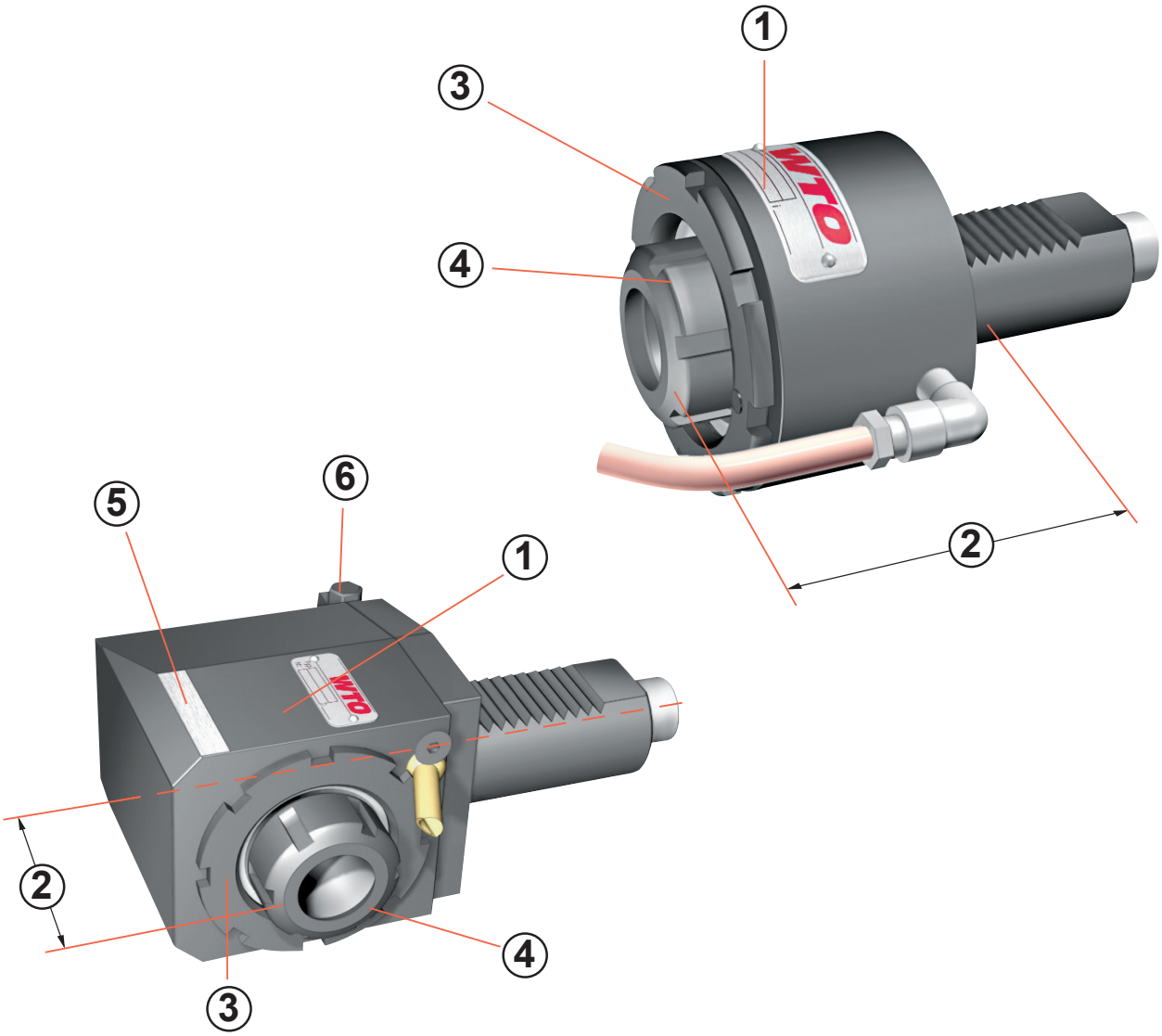

1 + Large spindle bearings = High rigidity and premium cutting performance

2 + Short compact design = More tool length available

3 + Patented labyrinth seal = Best protection against contamination for longer bearing life

4 + External collet nut (Standard on: ER-32, ER-40, ER-50) = Higher clamping force

5 + Ground indicator surface = Fast and accurate alignment of right angle driven tool

6 Centerline adjustment = Precise alignment of right angle driven tool

© WTO GmbH • Subject to change without notice.
ООО "ПРОВЕРТ" www.prowert.ru info@prowert.ru +7 (495) 108-05-38

Machine type listing • Turret specification

From the Machine Type listing below, find the turret specification for your machine.
Determine the style of precision driven tool needed from the Program Overview page.
Using the turret specification, select the suitable driven tool from the data sheets.

Typ A: Face mounted

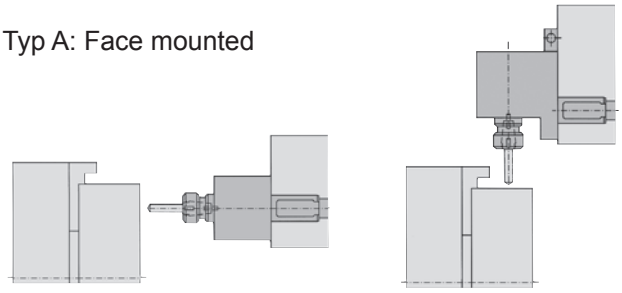

Typ B: O.D. mounted

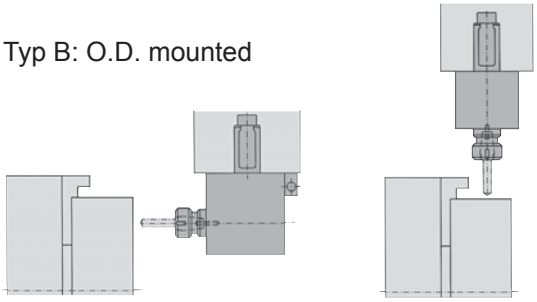

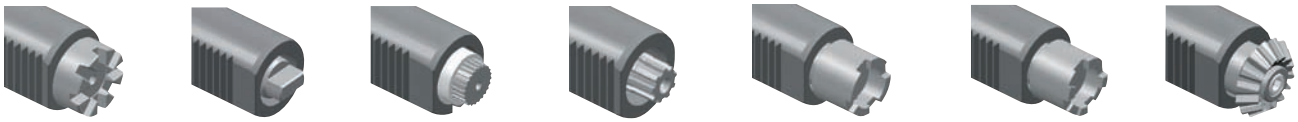

Machine Type	Turret specification				Remarks
	VDI ∅D	Turret manufacturer	Type	Drive coupling	
Boehringer HTC-150M	30	Duplomatic	A	DIN 1809	
Boehringer HTC-200M, HTC-250M	40	Duplomatic	A	DIN 1809	
Boehringer NG 180, NG 200, NG 250	40	Sauter (L2=120)	B	DIN 5480	Upper turret: also L2=100 mm suitable
Boehringer NG 400	50	Sauter	B	DIN 5480	
Colchester Storm II 120M, Tornado 120M	30	Sauter	A	DIN 5482	
Colchester Storm II 220M, Tornado 220M	40	Sauter	A	DIN 5482	
Doosan S 280M	25	Sauter	B	DIN 5480	
Doosan S 310M, S 310SM, S 310SLM, S 240LM	30	Sauter (L2=85)	B	DIN 5480	
Doosan S 390LM	40	Sauter	A	DIN 5482	
Doosan V 420M, V420TM, V 550M, V 550TM	50	Sauter	A	DIN 5480	
Doosan Z 280TM	40	Sauter (L2=100)	B	DIN 5480	
Doosan Z 290M, Z 290SM, Z 290SMY	30	Sauter (L2=85)	B	DIN 5480	
Doosan Z 340SM	30	Sauter (L2=100)	B	DIN 5480	
Emag VSC 160, VSC 200, VSC 250, VL2, VL3, VL5	40	Emag	B	DIN 1809	
Emag VSC 315, VSC 400, VSC 500	50	Emag	B	DIN 1809	
Emco EmcoTurn 332 MC	25	Emco 332	B	DIN 5480	
Emco EmcoTurn 700	50	Duplomatic	A	DIN 1809	
Emco EmcoTurn 900	60	Duplomatic	A	DIN 1809	
Emco EmcoTurn E 25	16	Sauter	A	DIN5480	
Emco EmcoTurn E 45, E 65	30	Sauter	A	DIN 5480	
Emco HyperTurn 645 MC, 665 MC	30	Emco HT-665	B	DIN 5480	
Emco HyperTurn 690 MC	40	Emco HT-690	B	DIN 5480	
Emco MaxxTurn 110	50	Sauter	A	DIN 5480	
Emco MaxxTurn 25	16	Sauter	A	DIN 5480	Without sub spindle
Emco MaxxTurn 45	25	Emco 332	B	DIN 5480	
Emco MaxxTurn 65	30	Emco HT-665	B	DIN 5480	
Fortune VTurn II-16/20CV	30 30	Duplomatic Sauter	A A	DIN 1809 DIN 5480	
Fortune VTurn II-16/20YCV	30	Sauter (L2=85)	B	DIN 5480	
Fortune VTurn II-23/26BCV, 26YCV(B)	40	Sauter (L2=100)	B	DIN 5480	
Fortune VTurn II-23/26CV	40 40	Duplomatic Sauter	A A	DIN 1809 DIN 5480	
Fortune VTurn-36CV	50	Sauter	A	DIN 5482	
Fortune VTurn-46CV	50	Sauter	A	DIN 5480	
Fortune VTurn-A26/85CV	40	Sauter	A	DIN5480	
Gildemeister CTV 200, CTV 250 linear	40	Sauter (L2=100)	B	DIN 5480	
Gildemeister CTV 400 linear	50	Sauter	B	DIN 5480	
Gildemeister CTX 210, 310, 410, 320 linear	30	Sauter	A	DIN 5480	Without sub spindle
Gildemeister CTX 310, 410, 320 linear with sub spindle	30	Sauter (L2=100)	B	DIN 5480	
Gildemeister CTX 420 linear	40	Sauter	A	DIN 5480	Without sub spindle
Gildemeister CTX 420 linear with sub spindle	40	Sauter (L2=100)	B	DIN 5480	VDI serration: right hand
Gildemeister CTX 510, 520 linear	40	Sauter	A	DIN 5480	Without sub spindle
Gildemeister CTX 620 linear	50	Sauter	A	DIN 5480	Without sub spindle
Gildemeister CTX alpha	30	Sauter	A	DIN 5480	Without sub spindle
Gildemeister CTX alpha with sub spindle	30	Sauter	B	DIN 5480	

© WTO GmbH • Subject to change without notice.
ООО "ПРОВЕРТ" www.prowert.ru info@prowert.ru +7 (495) 108-05-38

Maschine Type	Turret specification				Remarks
	VDI ∅D	Turret Manufacturer	Type	Drive coupling	
Gildemeister CTX beta	40	Sauter	A	DIN 5480	Without sub spindle
Gildemeister CTX beta with sub spindle	40	Sauter (L2=100)	B	DIN5480	
Gildemeister CTX gamma	50	Sauter	A	DIN5480	Without sub spindle
Gildemeister GMX 250, 300, 400, 500 linear	40	Sauter (L2=100)	B	DIN 5480	
Gildemeister Sprint 65	30	Sauter (L2=100)	B	DIN 5480	Only for new version since 2005
Gildemeister Twin 102	30 40	Sauter (L2=100) Sauter (L2=100)	B B	DIN 5480 DIN 5480	Frame size 2 – option = VDI 30 Frame size 2 – standard = VDI 40
Gildemeister Twin 42	25 30 40	Sauter Sauter (L2=100) Sauter (L2=100)	B B B	DIN 5480 DIN 5480 DIN 5480	Frame size 1 Frame size 2 – standard = VDI 30 Frame size 2 – option = VDI 40
Gildemeister Twin 65	30 40	Sauter (L2=100) Sauter (L2=100)	B B	DIN 5480 DIN 5480	Frame size 2 – standard = VDI 30 Frame size 2 – option = VDI 40
Haas SL 20 (VDI), 30 (VDI)	40	Haas (L=104.85)	A	1-step	VDI turret
Haas SL 20, 30	40	Haas (L=117.55)	A	1-step	Hybrid turret
Haas SL 40 (VDI)	40	Haas (L=117.55)	A	1-step	VDI turret
Haas SL 40	40	Haas (L=130.25)	A	1-step	Hybrid turret
Hardinge Elite 6/42, 8/51	30	Sauter (L2=85)	B	DIN 5480	
Hardinge Quest 8/51, 10/65	30	Sauter (L2=100)	B	DIN 5480	
Hardinge Quest LMC 42	25	Sauter	B	DIN 5480	
Hardinge Talent 6/45, 8/52	30	Sauter	A	DIN 5482	
Hardinge Talent 8/52A, 10/78	40	Sauter	A	DIN 5482	
Heyligenstaedt Heynumat 15	50	Sauter	A	DIN 5482	
Heyligenstaedt Heynumat 20, 21, 24, 25	60	Sauter	A	DIN 5482	
Heyligenstaedt Heynumat 5	40	Sauter	A	DIN 5482	
Index C200	30	Index G300	B	1-step	“V” plate
Index C65, C100, C200	25	Index G200	B	1-step	“V” plate
Index G160, G200	25	Index G200	B	1-step	“V” plate
Index G160, G250, G300	30	Index G300	B	1-step	“V” plate
Index G250	40	Index G250	B	1-step	“V” plate
Index G400	40	Index G400	B	1-step	“V” plate
Index V160	25 30	Index G200 Index G300	B B	1-step 1-step	“V” plate “V” plate
Index V300	30 40	Index G300 Index V300	B B	1-step 1-step	“V” plate “V” plate
Mazak MP Triple 8200Y	40*	Mazak MP-6200	B	DIN 1809	
Mazak MP-6100	40*	Mazak MP-6100	B	DIN 1809	
Mazak MP-6200, MP-6200Y, MP-6250	40*	Mazak MP-6200	B	DIN 1809	12 stations turret
Mazak MP-6200Y (16 stations turret)	40*	Mazak MP-6100	B	DIN 1809	
Mazak MP-6300, MP-6300Y	50*	Mazak MP-6300	B	DIN 1809	
Mazak QT Nexus 100-II M, MY	40*	Mazak QTN-100M	B	DIN 1809	
Mazak QT Nexus 100-II MS, MSY	40*	Mazak QTN-100MS	B	DIN 1809	
Mazak QT Nexus 200-II, 250-II M, MY	40*	Mazak QTN-200M	B	DIN 1809	12 stations turret
Mazak QT Nexus 200-II, 250-II M (16 stations turret)	40*	Mazak QTN-100M	B	DIN 1809	
Mazak QT Nexus 200-II, 250-II MS, MSY	40*	Mazak QTN-200MS	B	DIN 1809	12 stations turret, with sub spindle
Mazak QT-Nexus 200-II, 250-II MS (16 stations turret)	40*	Mazak QTN-100MS	B	DIN 1809	With sub spindle
Mazak QT-Nexus 300-II M, 350-II M, MY	50*	Mazak QTN-300M	B	DIN 1809	
Mazak SQT-100M	40*	Mazak QTN-100M	B	DIN 1809	
Mazak SQT-100MS	40*	Mazak QTN-100MS	B	DIN 1809	With sub spindle
Mazak SQT-200, 250 M	40*	Mazak QTN-200M	B	DIN 1809	12 stations turret
Mazak SQT-200, 250 M (16 stations turret)	40*	Mazak QTN-100M	B	DIN 1809	
Mazak SQT-200, 250 MS	40*	Mazak QTN-200MS	B	DIN 1809	12 stations turret, with sub spindle
Mazak SQT-200, 250 MS (16 stations turret)	40*	Mazak QTN-100MS	B	DIN 1809	With sub spindle
Mazak SQT-300, 350 M	50*	Mazak QTN-300M	B	DIN 1809	
Monforts DNC 500 Duoturn	40	Sauter (L2=120)	B	DIN 5480	
Monforts MHC	40	Sauter (L2=120)	B	DIN 5480	
Monforts MNC 1000	60 50	Sauter Sauter	A A	DIN 5482 DIN 5482	Turret 1 + 2 Turret 2 - Option
Monforts MNC 500	40 40	Sauter Sauter (L2=120)	A B	DIN 5482 DIN 5480	Turret 1 Turret 2
Monforts RNC 400, 500 DuoTurn	40	Sauter (L2=120)	B	DIN 5480	
Monforts RNC 400, 500, 600 MultiTurn	40	Sauter	A	DIN 5482	
Monforts RNC 700	50	Sauter	A	DIN 5482	
Monforts UniCen 502	40	Sauter (L2=100)	B	DIN5480	
Niles N 10	30 40	Sauter Sauter	A A	DIN 5482 DIN 5482	Drive coupling: B15x12 Drive coupling: B17x14
Niles N 20	40 50	Sauter Sauter	A A	DIN 5482 DIN 5482	Drive coupling: B17x14 Drive coupling: B20x17

© WTO GmbH • Subject to change without notice.

ООО "ПРОВЕРТ" www.prowert.ru info@prowert.ru +7 (495) 108-05-38

Maschine Type	Turret specification				Remarks
	VDI ∅D	Turret Manufacturer	Type	Drive coupling	
Niles N 30	50	Sauter	A	DIN 5482	Drive coupling: B20x17
Niles N 40, N50	60	Sauter	A	DIN 5482	Drive coupling: B25x22
Niles NF 20, NV 20	40	Sauter (L2=100)	B	DIN 5480	
Okuma LB 15II-M	40	Okuma LB 300-M	A	1-step	
Okuma LB 300-M, LB 300-MY	40	Okuma LB 300-M	A	1-step	
Okuma LB 300-MW	40	Okuma LT 300-M	B	1-step	Only for new version since 2005
Okuma LB 45II-M	60	Okuma LU 45-M	A	1-step	
Okuma LT 10-M	30	Okuma LT 200-M	B	1-step	
Okuma LT 15-M	40	Okuma LT 300-M	B	1-step	
Okuma LT 200-M	30	Okuma LT 200-M	B	1-step	
Okuma LT 300-M	40	Okuma LT 300-M	B	1-step	
Okuma LU 15-M	40	Okuma LB 300-M	A	1-step	
Okuma LU 300-M	40	Okuma LB 300-M	A	1-step	
Okuma LU 35-M	50	Okuma LU 35-M	A	1-step	
Okuma LU 45-M	60	Okuma LU 45-M	A	1-step	
Okuma LVT 300-M	40	Okuma LVT 300-M	A	1-step	
Okuma LVT 400-M	40	Okuma LVT 400-M	A	1-step	
Okuma MacTurn 350	40	Okuma LT 300-M	B	1-step	
Scherer VDZ 120, VDZ 120DS, VDZ 200	30 40	Sauter (L2=100) Sauter (L2=100)	B B	DIN 5480 DIN 5480	
Scherer VDZ 420XL, VDZ 420XL DS	50	Sauter	B	DIN 5480	
Scherer VDZ 80, VDZ 80DS	25	Sauter	B	DIN 5480	
Spinner TC 400 MC	30	Baruffaldi	A	TBMA 160	
Spinner TC 600 MC	30 40	Baruffaldi Baruffaldi	A A	TBMA 160 TBMA 200	
Spinner TC 600 MCY, SMCY	30	Baruffaldi (L2=110)	B	TBMR 160	
Spinner TC 800 MC	50	Baruffaldi	A	TBMA 250	
Spinner TC 800 SMC, MCY	50	Baruffaldi (L2=110)	B	TBMR 250	
Spinner TC 800 SMCY	50	Baruffaldi (L2=110)	B	TBMR 250	Only on main spindle acceptable, sub spindle needs L2 = 140!
Traub TNA 300	30	Sauter	A	DIN 5482	
Traub TNA 400	40	Sauter	A	DIN 5482	
Traub TNC 42 DG, DGY, TNC 65	30	Traub TNC 65	B	bevel gear	
Traub TNC 42 EG, EGY	25	Traub TNC 42	B	bevel gear	
Victor VTurn II-16/20CV	30 30	Duplomatic Sauter	A A	DIN 1809 DIN 5480	
Victor VTurn II-16/20YCV	30	Sauter (L2=85)	B	DIN 5480	
Victor VTurn II-23/26BCV, 26YCV(B)	40	Sauter (L2=100)	B	DIN 5480	
Victor VTurn II-23/26CV	40 40	Duplomatic Sauter	A A	DIN 1809 DIN 5480	
Victor VTurn-36CV	50	Sauter	A	DIN 5482	
Victor VTurn-46CV	50	Sauter	A	DIN 5480	
Victor VTurn-A26/85CV	40	Sauter	A	DIN 5480	
Weiler DZ 35, DZ 40, DZ 65	25	Sauter	B	DIN 5480	
Weiler DZ 45 H3, DZ 45 H4	25	Sauter	B	DIN 5480	
Weiler DZ 45 T	30	Sauter	A	DIN 5482	
WFL M30	40 40	Sauter Sauter (L2=100)	A B	DIN 5482 DIN 5480	 New version
WFL M40, M60, M65	50	Sauter	A	DIN 5482	

*no VDI standard

© WTO GmbH • Subject to change without notice.
ООО "ПРОВЕРТ" www.prowert.ru info@prowert.ru +7 (495) 108-05-38

PROGRAM OVERVIEW

ISO 9001

WTO

4101... Straight drill/milling unit
Ratio = 1:1
Coolant supply: external, internal (max. 435 PSI) **Page 8 - 9**

4101... Straight offset drill/milling unit
Ratio = 1:1, 2:1, 1:2
Coolant supply: external, internal (max. 1100 PSI) **Page 10 - 15**

4105... Right angle drill/milling unit
Ratio = 1:1, 2:1, 1:2
Coolant supply: external, internal (max. 1100 PSI) **Page 16 - 21**

4105... Right angle back set drill/milling unit
Ratio = 1:1, 2:1
Coolant supply: external, internal (max. 1100 PSI) **Page 22 - 25**

4105... Right angle double spindle drill/milling unit
Ratio = 1:1
Coolant supply: external **Page 26**

4110... Adjustable angle drill/milling unit
Adjustment: -92° to +92°
Coolant supply: external **Page 27**

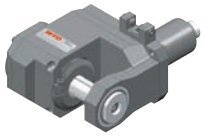

4109... Slitting saw unit
Milling arbor: interchangeable
Coolant supply: external **Page 28**

4115... Offset slitting saw unit
Milling arbor: interchangeable
Coolant supply: external **Page 29**

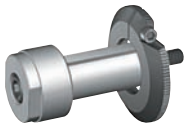

1600... Interchangeable milling arbor **Page 30**

1800, 1810... Tapping collets
1900, 1901, 1910... Collets
2001, 2002 Collet nuts **Page 31 - 34**

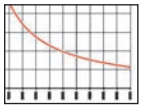

Pressure diagram - internal coolant **Page 35**

© WTO GmbH • Subject to change without notice.

ООО "ПРОВЕРТ" www.prowert.ru info@prowert.ru +7 (495) 108-05-38

Straight drill/milling unit - for ER style collet

Please select suitable turret specification from the Machine Type listing!
Typ A: Face mounted
Typ B: O. D. mounted
Ratio = 1:1

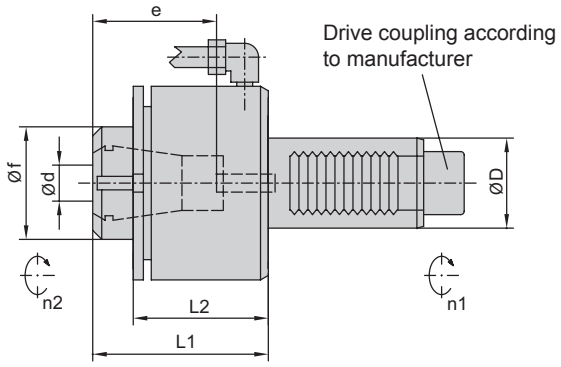

4101... (EC) with external coolant supply

Order wrenches separately!

Item No.	Turret specification				Clamping System				Dimensions / Data						Wrench
	∅D	Turret manufacturer	Type	Drive coupling	Size	Ød	e	Øf	L1	L2		M Nm	Ratio n1:n2		00675...
410110009-16	16	Sauter	A	DIN 5480	ER-16	.5-10	35	28	68	42		6	1:1		...000340
410113002-20	20	Duplomatic	A	DIN 1809	ER-20	1-13	42	34	88	60		15	1:1		...000379
410113009-20	20	Sauter[1)]	A	DIN 5480	ER-20	1-13	42	34	68	54		15	1:1		...000577
410116010-25	25	Sauter Emco 332	B	DIN 5480	ER-25A	1-16	48	55	67	56		20	1:1		...000909
410116053-30	30	Baruffaldi	A	TBMA 160	ER-25	1-16	47	42	94	65		32	1:1		...000359
410116113-30	30	Baruffaldi	B	TBMR 160	ER-25A	1-16	47	40	77	65		32	1:1		...000433
410116065-30	30	Duplomatic	A	DIN 1809	ER-25	1-16	47	42	94	65		32	1:1		...000359
410116042-30	30	Okuma LT 200-M	B	1-step	ER-25A	1-16	47	40	77	65		32	1:1		...000433
410116032-30	30	Sauter Emco HT-665	A,B B	DIN 5480	ER-25	1-16	47	42	94	65		32	1:1		...000359
410116015-30	30	Sauter	A	DIN 5482	ER-25	1-16	47	42	94	65		32	1:1		...000359
410120142-40	40	Baruffaldi	A B	TBMA 200 TBMR 200	ER-32	2-20	70	50	78	60		63	1:1		...000515
410120042-40	40	Duplomatic	A	DIN 1809	ER-32	2-20	79	50	87	60		63	1:1		...000515
410120144-40	40	Emag	B	DIN 1809	ER-32A	2-20	60	64	82	70		63	1:1		...000892
410120181-40	40	Haas (L=104.85)	A	1-step	ER-32	2-20	70	50	78	60		63	1:1		...000515
410120183-40	40	Haas (L=117.55)	A	1-step	ER-32	2-20	70	50	78	60		63	1:1		...000515
410120187-40	40	Haas (L=130.25)	A	1-step	ER-32	2-20	70	50	78	60		63	1:1		...000515
410120098-40	40*	Mazak QTN-100MS	B	DIN 1809	ER-32	2-20	70	50	78	60		63	1:1		...000515
410120089-40	40*	Mazak QTN-200MS	B	DIN 1809	ER-32	2-20	70	50	78	60		63	1:1		...000515
410120118-40	40	Okuma LB 300-M Okuma LT 300-M Okuma LVT 300-M	A B A	1-step	ER-32	2-20	70	50	78	60		63	1:1		...000515
410126000-40	40	Okuma LVT 400-M	A	1-step	ER-40	3-26	61	63	83	60		63	1:1		...000449
410120010-40	40	Sauter Emco HT-690	A,B B	DIN 5480	ER-32	2-20	70	50	78	60		63	1:1		...000515
410120119-40	40	Sauter	A	DIN 5482	ER-32	2-20	70	50	78	60		63	1:1		...000515
410126002-50	50	Baruffaldi	A B	TBMA 250 TBMR 250	ER-40	3-26	73	63	121	82		100	1:1		...000124
410126017-50	50	Duplomatic	A	DIN 1809	ER-40	3-26	73	63	121	82		100	1:1		...000124
410120020-50	50	Emag	B	DIN 1809	ER-32A	2-20	60	86	87	78		100	1:1		...000732
410126016-50	50	Okuma LU 35-M	A	1-step	ER-40	3-26	73	63	121	82		100	1:1		...000124
410134002-50	50	Okuma LU 35-M	A	1-step	ER-50	10-34	95	78	130	85		100	1:1		...000392
410126059-50	50	Sauter	A,B	DIN 5480	ER-40	3-26	73	63	126	88		100	1:1		...000124
410126000-50	50	Sauter	A	DIN 5482	ER-40	3-26	73	63	121	82		100	1:1		...000124
410134035-60	60	Baruffaldi	A	TBMA 320	ER-50	10-34	95	78	130	85		100	1:1		...000392
410134015-60	60	Duplomatic	A	DIN 1809	ER-50	10-34	95	78	130	85		200	1:1		...000392
410134006-60	60	Okuma LU 45-M	A	1-step	ER-50	10-34	95	78	130	85		200	1:1		...000392
410134008-60	60	Sauter	A	DIN 5482	ER-50	10-34	95	78	130	85		200	1:1		...000392

*no VDI standard
1) Drive coupling W11x0,8 / DIN 5480

© WTO GmbH • Subject to change without notice.
ООО "ПРОВЕРТ" www.prowert.ru info@prowert.ru +7 (495) 108-05-38

Straight drill/milling unit - for ER style collet

Please select suitable turret specification from the Machine Type listing!
Typ A: Face mounted
Typ B: O. D. mounted
Ratio = 1:1
Max. coolant pressure = 435 PSI (30 bar)
(Check specified coolant pressure diagram!)

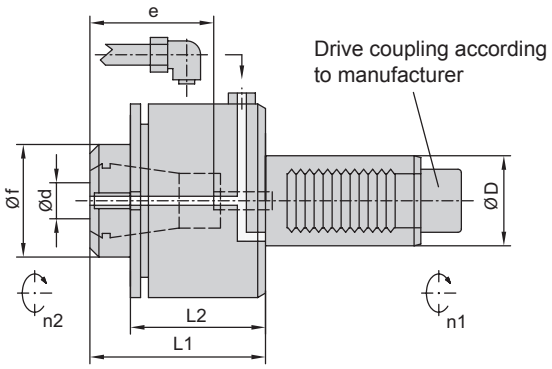

4101... (IC) with internal + external coolant supply

Order wrenches separately!

Item No.	Turret specification				Clamping System				Dimensions / Data					Coolant	Wrench
	ØD	Turret manufacturer	Type	Drive coupling	Size	Ød	e	Øf	L1	L2		M Nm	Ratio n1:n2	Pressure diagram	00675...
410113001-20	20	Duplomatic	A	DIN 1809	ER-20	1-13	42	34	88	60		15	1:1	D01003	...000379
410113010-20	20	Sauter[1)]	A	DIN 5480	ER-20	1-13	42	34	68	54		15	1:1	D01003	...000577
410116012-25	25	Sauter Emco 332	B	DIN 5480	ER-25A	1-16	41	40	68	62		20	1:1	D01001	...000838
410116082-30	30	Baruffaldi	A	TBMA 160	ER-25	1-16	47	42	94	65		32	1:1	D01001	...000359
410116114-30	30	Baruffaldi	B	TBMR 160	ER-25A	1-16	47	40	77	65		32	1:1	D01001	...000433
410116083-30	30	Duplomatic	A	DIN 1809	ER-25	1-16	47	42	94	65		32	1:1	D01001	...000359
410116043-30	30	Okuma LT 200-M	B	1-step	ER-25A	1-16	47	40	77	65		32	1:1	D01001	...000433
410116033-30	30	Sauter Emco HT-665	A,B B	DIN 5480	ER-25	1-16	47	42	94	65		32	1:1	D01001	...000359
410116016-30	30	Sauter	A	DIN 5482	ER-25	1-16	47	42	94	65		32	1:1	D01001	...000359
410120169-40	40	Baruffaldi	A B	TBMA 200 TBMR 200	ER-32	2-20	70	50	78	60		63	1:1	D01007	...000515
410120088-40	40	Duplomatic	A	DIN 1809	ER-32	2-20	79	50	87	60		63	1:1	D01007	...000515
410120148-40	40	Emag[2)]	B	DIN 1809	ER-32A	2-20	60	64	82	70		63	1:1	D01013	...000892
410120180-40	40	Haas (L=104.85)	A	1-step	ER-32	2-20	70	50	78	60		63	1:1	D01007	...000515
410120182-40	40	Haas (L=117.55))	A	1-step	ER-32	2-20	70	50	78	60		63	1:1	D01007	...000515
410120186-40	40	Haas (L=130.25))	A	1-step	ER-32	2-20	70	50	78	60		63	1:1	D01007	...000515
410120106-40	40*	Mazak QTN-100MS	B	DIN 1809	ER-32	2-20	70	50	78	60		63	1:1	D01007	...000515
410120090-40	40*	Mazak QTN-200MS	B	DIN 1809	ER-32	2-20	70	50	78	60		63	1:1	D01007	...000515
410120072-40	40	Okuma LB 300-M Okuma LT 300-M Okuma LVT 300-M	A B A	1-step	ER-32	2-20	70	50	78	60		63	1:1	D01007	...000515
410126001-40	40	Okuma LVT 400-M	A	1-step	ER-40	3-26	61	63	83	60		63	1:1	D01007	...000449
410120011-40	40	Sauter Emco HT-690	A,B B	DIN 5480	ER-32	2-20	70	50	78	60		63	1:1	D01007	...000515
410120120-40	40	Sauter	A	DIN 5482	ER-32	2-20	70	50	78	60		63	1:1	D01007	...000515
410126058-50	50	Baruffaldi	A B	TBMA 250 TBMR 250	ER-40	3-26	73	63	121	82		100	1:1	D01007	...000124
410126024-50	50	Duplomatic	A	DIN 1809	ER-40	3-26	73	63	121	82		100	1:1	D01007	...000124
410120026-50	50	Emag[2)]	B	DIN 1809	ER-32A	2-20	60	86	87	78		100	1:1	D01013	...000894
410126018-50	50	Okuma LU 35-M	A	1-step	ER-40	3-26	73	63	121	82		100	1:1	D01007	...000124
410134001-50	50	Okuma LU 35-M	A	1-step	ER-50	10-34	95	78	130	85		100	1:1	D01007	...000392
410126060-50	50	Sauter	A,B	DIN 5480	ER-40	3-26	73	63	126	88		100	1:1	D01007	...000124
410126007-50	50	Sauter	A	DIN 5482	ER-40	3-26	73	63	121	82		100	1:1	D01007	...000124
410134036-60	60	Baruffaldi	A	TBMA 320	ER-50	10-34	95	78	130	85		100	1:1	D01007	...000392
410134014-60	60	Duplomatic	A	DIN 1809	ER-50	10-34	95	78	130	85		200	1:1	D01007	...000392
410134005-60	60	Okuma LU 45-M	A	1-step	ER-50	10-34	95	78	130	85		200	1:1	D01007	...000392
410134002-60	60	Sauter	A	DIN 5482	ER-50	10-34	95	78	130	85		200	1:1	D01007	...000392

*no VDI standard
1) Drive coupling W11x0,8 / DIN 5480 2) max. coolant pressure = 1160 PSI (80 bar)

© WTO GmbH • Subject to change without notice.

ООО "ПРОВЕРТ" www.prowert.ru info@prowert.ru +7 (495) 108-05-38

Straight offset drill/milling unit - for ER style collet

Please select suitable turret specification from the Machine Type listing!
Typ A: Face mounted
Typ B: O. D. mounted
Ratio = 1:1

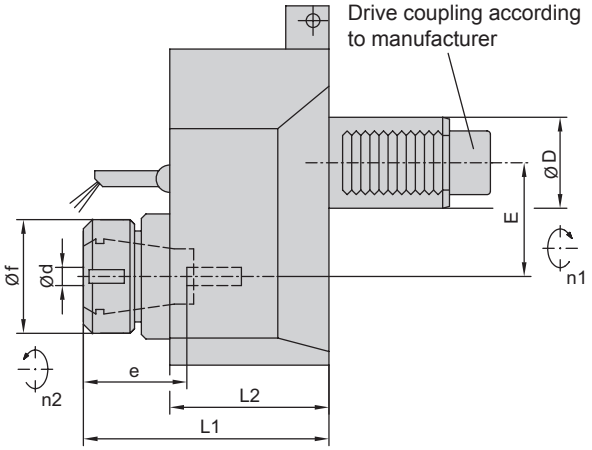

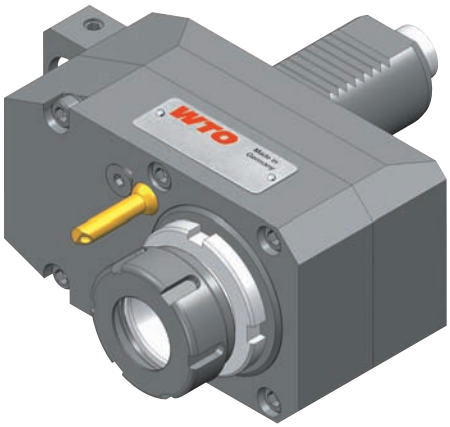

4101... (EC) with external coolant supply

Order wrenches separately!

Item No.	Turret specification				Clamping System				Dimensions / Data						Wrench
	ØD	Turret manufacturer	Type	Drive coupling	Size	Ød	e	Øf	L1	L2	E	M Nm	Ratio n1:n2		00675...
410116020-25	25	Emco 332	B	DIN 5480	ER-25A	1-16	41	52	80	59	35	20	1:1		...000801
410116017-25	25	Sauter	B	DIN 5480	ER-25A	1-16	41	52	80	59	35	20	1:1		...000801
410116067-30	30	Baruffaldi	A	TBMA 160	ER-25A	1-16	43	55	83	70	50	32	1:1		...000801
410116115-30	30	Baruffaldi	B	TBMR 160	ER-25A	1-16	43	55	83	70	50	32	1:1		...000801
410116049-30	30	Duplomatic	A	DIN 1809	ER-25A	1-16	43	55	83	70	50	32	1:1		...000801
410116079-30	30	Emco HT-665	B	DIN 5480	ER-25A	1-16	43	55	83	70	50	32	1:1		...000801
410116094-30	30	Sauter	A	DIN 5480	ER-25A	1-16	43	55	83	70	50	32	1:1		...000801
410116058-30	30	Sauter	B	DIN 5480	ER-25A	1-16	43	55	83	70	50	32	1:1		...000801
410116068-30	30	Sauter	A	DIN 5482	ER-25A	1-16	43	55	83	70	50	32	1:1		...000801
410120143-40	40	Baruffaldi	A	TBMA 200	ER-32	2-20	49	50	108	70	50	63	1:1		...000592
410120277-40	40	Baruffaldi	B	TBMR 200	ER-32	2-20	49	50	108	70	50	63	1:1		...000592
410120101-40	40	Duplomatic	A	DIN 1809	ER-32	2-20	49	50	108	70	50	63	1:1		...000592
410120235-40	40	Haas (L=104.85)	A	1-sep	ER-32	2-20	49	50	108	70	50	63	1:1		...000592
410120237-40	40	Haas (L=117.55)	A	1-step	ER-32	2-20	49	50	108	70	50	63	1:1		...000592
410120265-40	40	Haas (L=130.25)	A	1-step	ER-32	2-20	49	50	108	70	50	63	1:1		...000592
410120097-40	40*	Mazak MP-6100	B	DIN 1809	ER-32	2-20	49	50	108	70	50	63	1:1		...000592
410120094-40	40*	Mazak MP-6200	B	DIN 1809	ER-32	2-20	49	50	108	70	50	63	1:1		...000592
410120129-40	40*	Mazak QTN-100M(S)	B	DIN 1809	ER-32	2-20	49	50	108	70	50	63	1:1		...000592
410120087-40	40*	Mazak QTN-200M(S)	B	DIN 1809	ER-32	2-20	49	50	108	70	50	63	1:1		...000592
410120198-40	40	Sauter	A	DIN 5480	ER-32	2-20	49	50	108	70	50	63	1:1		...000592
410120151-40	40	Sauter	B	DIN 5480	ER-32	2-20	49	50	108	70	50	63	1:1		...000592
410120152-40	40	Sauter	A	DIN 5482	ER-32	2-20	49	50	108	70	50	63	1:1		...000592
410126032-50	50	Baruffaldi	A	TBMA 250	ER-40	3-26	75	63	152	123	75	100	1:1		...000863
410126033-50	50	Duplomatic	A	DIN 1809	ER-40	3-26	75	63	152	123	75	100	1:1		...000863
410126027-50	50*	Mazak MP-6300	B	DIN 1809	ER-40	3-26	55	63	126	84	75	100	1:1		...000941
410126025-50	50*	Mazak QTN-300M	B	DIN 1809	ER-40	3-26	55	63	126	84	75	100	1:1		...000941
410126034-50	50	Sauter	A	DIN 5482	ER-40	3-26	75	63	152	123	75	100	1:1		...000863
410134047-60	60	Baruffaldi	A	TBMA 320	ER-50	10-34	87	78	169	123	75	100	1:1		...000612
410134017-60	60	Duplomatic	A	DIN 1809	ER-50	10-34	87	78	169	123	75	200	1:1		...000612
410134013-60	60	Sauter	A	DIN 5482	ER-50	10-34	87	78	169	123	75	200	1:1		...000612

*no VDI standard

© WTO GmbH • Subject to change without notice.
ООО "ПРОВЕРТ" www.prowert.ru info@prowert.ru +7 (495) 108-05-38

Straight offset drill/milling unit - for ER style collet
- HIGH PRESSURE -

Please select suitable turret specification from the Machine Type listing!
Typ A: Face mounted
Typ B: O. D. mounted
Ratio = 1:1
Max. coolant pressure = 1160 PSI (80 bar)

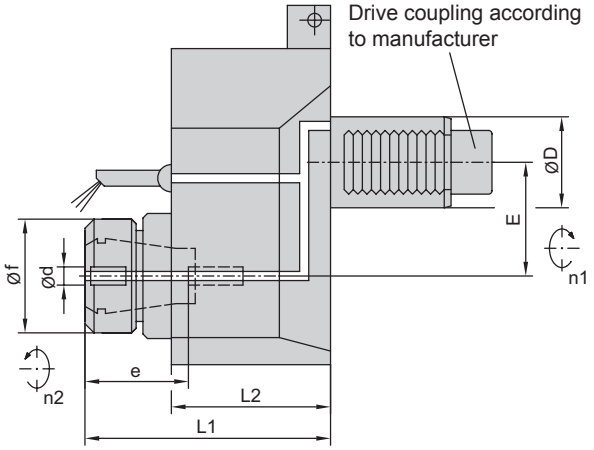

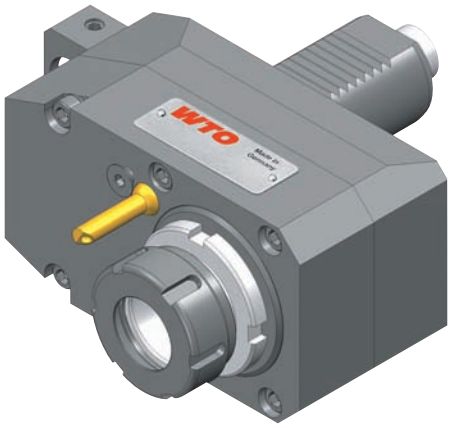

4101... (IC - HP) with internal + external coolant supply

Order wrenches separately!

Item No.	Turret specification				Clamping System				Dimensions / Data					Coolant	Wrench
	∅D	Turret manufacturer	Type	Drive coupling	Size	∅d	e	∅f	L1	L2	E	M Nm	Ratio n1:n2	Pressure diagram	00675...
410116069-30	30	Baruffaldi	A	TBMA 160	ER-25A	1-16	43	55	83	70	50	32	1:1	D01013	...000801
410116116-30	30	Baruffaldi	B	TBMR 160	ER-25A	1-16	43	55	83	70	50	32	1:1	D01013	...000801
410116050-30	30	Duplomatic	A	DIN 1809	ER-25A	1-16	43	55	83	70	50	32	1:1	D01013	...000801
410116080-30	30	Emco HT-665	B	DIN 5480	ER-25A	1-16	43	55	83	70	50	32	1:1	D01013	...000801
410116062-30	30	Okuma LT 200-M	B	1-step	ER-25A	1-16	43	55	83	70	50	32	1:1	D01013	...000801
410116095-30	30	Sauter	A	DIN 5480	ER-25A	1-16	43	55	83	70	50	32	1:1	D01013	...000801
410116057-30	30	Sauter	B	DIN 5480	ER-25A	1-16	43	55	83	70	50	32	1:1	D01013	...000801
410116071-30	30	Sauter	A	DIN 5482	ER-25A	1-16	43	55	83	70	50	32	1:1	D01013	...000801
410120153-40	40	Baruffaldi	A	TBMA 200	ER-32	2-20	49	50	108	70	50	63	1:1	D01013	...000592
410120278-40	40	Baruffaldi	B	TBMR 200	ER-32	2-20	49	50	108	70	50	63	1:1	D01013	...000592
410120102-40	40	Duplomatic	A	DIN 1809	ER-32	2-20	49	50	108	70	50	63	1:1	D01013	...000592
410120145-40	40	Emag	B	DIN 1809	ER-32	2-20	49	50	108	70	50	63	1:1	D01013	...000592
410120236-40	40	Haas (L=104.85)	A	1-step	ER-32	2-20	49	50	108	70	50	63	1:1	D01013	...000592
410120266-40	40	Haas (L=117.55)	A	1-step	ER-32	2-20	49	50	108	70	50	63	1:1	D01013	...000592
410120238-40	40	Haas (L=130.25)	A	1-step	ER-32	2-20	49	50	108	70	50	63	1:1	D01013	...000592
410120192-40	40	Emco HT-690	B	DIN 5480	ER-32	2-20	49	50	108	70	50	63	1:1	D01013	...000592
410120123-40	40*	Mazak MP-6100	B	DIN 1809	ER-32	2-20	49	50	108	70	50	63	1:1	D01013	...000592
410120126-40	40*	Mazak MP-6200	B	DIN 1809	ER-32	2-20	49	50	108	70	50	63	1:1	D01013	...000592
410120130-40	40*	Mazak QTN-100M(S)	B	DIN 1809	ER-32	2-20	49	50	108	70	50	63	1:1	D01013	...000592
410120133-40	40*	Mazak QTN-200M(S)	B	DIN 1809	ER-32	2-20	49	50	108	70	50	63	1:1	D01013	...000592
410120155-40	40	Okuma LB 300-M	A	1-step	ER-32	2-20	49	50	108	70	50	63	1:1	D01013	...000592
410116033-40	40	Okuma LT 300-M	B	1-step	ER-25A	1-16	43	55	84	71	50	63	1:1	D01013	...000801
410120202-40	40	Okuma LVT 300-M	A	1-step	ER-32	2-20	49	50	108	70	50	63	1:1	D01013	...000592
410120203-40	40	Okuma LVT 400-M	A	1-step	ER-32	2-20	49	50	108	70	50	63	1:1	D01013	...000592
410120199-40	40	Sauter	A	DIN 5480	ER-32	2-20	49	50	108	70	50	63	1:1	D01013	...000592
410120158-40	40	Sauter	B	DIN 5480	ER-32	2-20	49	50	108	70	50	63	1:1	D01013	...000592
410120159-40	40	Sauter	A	DIN 5482	ER-32	2-20	49	50	108	70	50	63	1:1	D01013	...000592
410126035-50	50	Baruffaldi	A	TBMA 250	ER-40	3-26	75	63	152	123	75	100	1:1	D01012	...000863
410126036-50	50	Duplomatic	A	DIN 1809	ER-40	3-26	75	63	152	123	75	100	1:1	D01012	...000863
410120028-50	50	Emag	B	DIN 1809	ER-32	2-20	49	50	108	70	50	80	1:1	D01013	...000592
410126028-50	50*	Mazak MP-6300	B	DIN 1809	ER-40	3-26	55	63	126	84	75	100	1:1	D01012	...000941
410126026-50	50*	Mazak QTN-300M	B	DIN 1809	ER-40	3-26	55	63	126	84	75	100	1:1	D01012	...000941
410134006-50	50	Okuma LU 35-M	A	1-step	ER-50	10-34	87	78	169	123	75	100	1:1	D01012	...000612
410126039-50	50	Sauter	A	DIN 5482	ER-40	3-26	75	63	152	123	75	100	1:1	D01012	...000863
410134048-60	60	Baruffaldi	A	TBMA 320	ER-50	10-34	87	78	169	123	75	100	1:1	D01012	...000612
410134016-60	60	Duplomatic	A	DIN 1809	ER-50	10-34	87	78	169	123	75	200	1:1	D01012	...000612
410134010-60	60	Okuma LU 45-M	A	1-step	ER-50	10-34	87	78	169	123	75	200	1:1	D01012	...000612
410134012-60	60	Sauter	A	DIN 5482	ER-50	10-34	87	78	169	123	75	200	1:1	D01012	...000612

*no VDI standard

© WTO GmbH • Subject to change without notice.

ООО "ПРОВЕРТ" www.prowert.ru info@prowert.ru +7 (495) 108-05-38

Straight offset drill/milling unit - for ER style collet
- Torque increaser -

Please select suitable turret specification from the Machine Type listing!
Typ A: Face mounted
Typ B: O. D. mounted
Ratio = 2:1 (speed reduction)

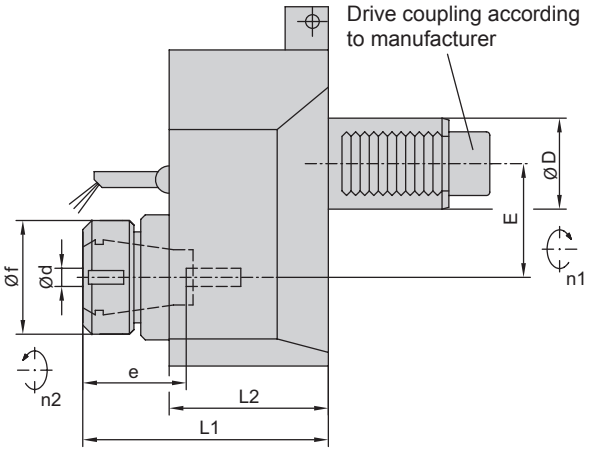

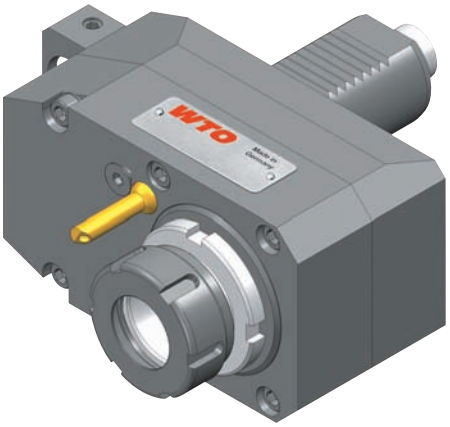

4101... (EC) with external coolant supply

Order wrenches separately!

Item No.	Turret specification				Clamping System				Dimensions / Data						Wrench
	ØD	Turret manufacturer	Type	Drive coupling	Size	Ød	e	Øf	L1	L2	E	M Nm	Ratio n1:n2		00675...
410116011-25	25	Emco 332	B	DIN 5480	ER-25A	1-16	41	52	80	59	35	40	2:1		...000801
410116013-25	25	Sauter	B	DIN 5480	ER-25A	1-16	41	52	80	59	35	40	2:1		...000801
410116072-30	30	Baruffaldi	A	TBMA 160	ER-25A	1-16	43	55	83	70	50	63	2:1		...000801
410116117-30	30	Baruffaldi	B	TBMR 160	ER-25A	1-16	43	55	83	70	50	63	2:1		...000801
410116084-30	30	Duplomatic	A	DIN 1809	ER-25A	1-16	43	55	83	70	50	63	2:1		...000801
410116077-30	30	Emco HT-665	B	DIN 5480	ER-25A	1-16	43	55	83	70	50	63	2:1		...000801
410120033-30	30	Emco HT-665	B	DIN 5480	ER32	2-20	49	50	108	70	50	63	2:1		...000592
410116063-30	30	Okuma LT 200-M	B	1-step	ER-25A	1-16	43	55	83	70	50	63	2:1		...000801
410120035-30	30	Sauter	A	DIN 5480	ER-32	2-20	49	50	108	70	50	63	2:1		...000592
410116059-30	30	Sauter	B	DIN 5480	ER-25A	1-16	43	55	83	70	50	63	2:1		...000801
410120027-30	30	Sauter	B	DIN 5480	ER-32	2-20	49	50	108	70	50	63	2:1		...000592
410120029-30	30	Sauter	A	DIN 5482	ER-32	2-20	49	50	108	70	50	63	2:1		...000592
410120166-40	40	Baruffaldi	A	TBMA 200	ER-32	2-20	49	50	108	70	50	100	2:1		...000592
410120279-40	40	Baruffaldi	B	TBMR 200	ER-32	2-20	49	50	108	70	50	100	2:1		...000592
410120149-40	40	Duplomatic	A	DIN 1809	ER-32	2-20	49	50	108	70	50	100	2:1		...000592
410120204-40	40	Emag	B	DIN 1809	ER-32	2-20	49	50	108	70	50	100	2:1		...000592
410120193-40	40	Emco HT-690	B	DIN 5480	ER-32	2-20	49	50	108	70	50	100	2:1		...000592
410120124-40	40*	Mazak MP-6100	B	DIN 1809	ER-32	2-20	49	50	108	70	50	100	2:1		...000592
410120127-40	40*	Mazak MP-6200	B	DIN 1809	ER-32	2-20	49	50	108	70	50	100	2:1		...000592
410120131-40	40*	Mazak QTN-100M(S)	B	DIN 1809	ER-32	2-20	49	50	108	70	50	100	2:1		...000592
410120134-40	40*	Mazak QTN-200M(S)	B	DIN 1809	ER-32	2-20	49	50	108	70	50	100	2:1		...000592
410120160-40	40	Okuma LB 300-M	A	1-step	ER-32	2-20	49	50	108	70	50	100	2:1		...000592
410116027-40	40	Okuma LT 300-M	B	1-step	ER-25A	1-16	43	55	84	71	50	100	2:1		...000801
410120200-40	40	Sauter	A	DIN 5480	ER-32	2-20	49	50	108	70	50	100	2:1		...000592
410120162-40	40	Sauter	B	DIN 5480	ER-32	2-20	49	50	108	70	50	100	2:1		...000592
410120140-40	40	Sauter	A	DIN 5482	ER-32	2-20	49	50	108	70	50	100	2:1		...000592
410134007-50	50	Baruffaldi	A	TBMA 250	ER-50	10-34	87	78	169	123	75	200	2:1		...000612
410134008-50	50	Duplomatic	A	DIN 1809	ER-50	10-34	87	78	169	123	75	200	2:1		...000612
410134010-50	50	Okuma LU 35-M	A	1-step	ER-50	10-34	87	78	169	123	75	200	2:1		...000612
410134011-50	50	Sauter	A	DIN 5482	ER-50	10-34	87	78	169	123	75	200	2:1		...000612
410134049-60	60	Baruffaldi	A	TBMA 320	ER-50	10-34	87	78	169	123	75	200	2:1		...000612
410134024-60	60	Duplomatic	A	DIN 1809	ER-50	10-34	87	78	169	123	75	200	2:1		...000612
410134025-60	60	Okuma LU 45-M	A	1-step	ER-50	10-34	87	78	169	123	75	200	2:1		...000612
410134026-60	60	Sauter	A	DIN 5482	ER-50	10-34	87	78	169	123	75	200	2:1		...000612

*no VDI standard

© WTO GmbH • Subject to change without notice.
ООО "ПРОВЕРТ" www.prowert.ru info@prowert.ru +7 (495) 108-05-38

Straight offset drill/milling unit - for ER style collet - Torque increaser - HIGH PRESSURE

Please select suitable turret specification from the Machine Type listing!
Typ A: Face mounted
Typ B: O. D. mounted
Ratio = 2:1 (speed reduction)
Max. coolant pressure = 1160 PSI (80 bar)

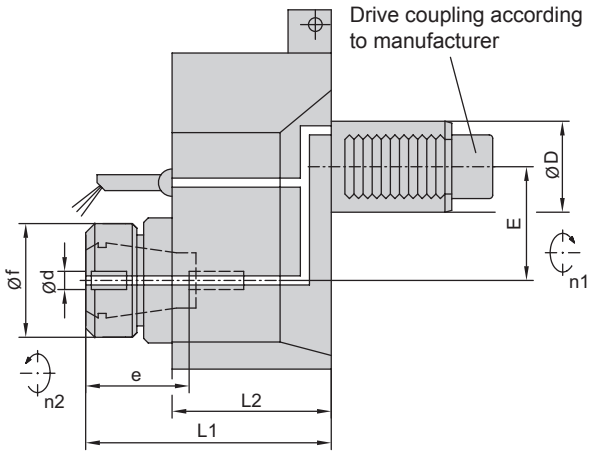

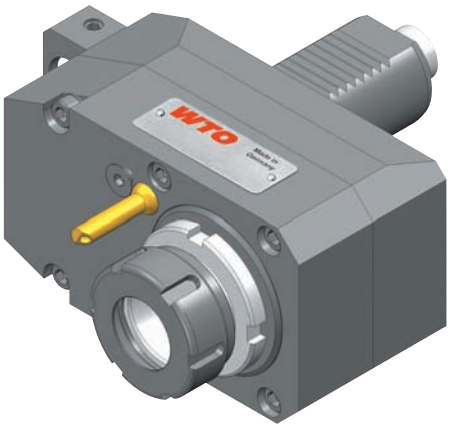

4101... (IC - HP) with internal + external coolant supply

Order wrenches separately!

Item No.	Turret specification				Clamping System				Dimensions / Data					Coolant	Wrench
	∅D	Turret manufacturer	Type	Drive coupling	Size	∅d	e	∅f	L1	L2	E	M Nm	Ratio n1:n2	Pressure diagram	00675...
410116074-30	30	Baruffaldi	A	TBMA 160	ER-25A	1-16	43	55	83	70	50	63	2:1	D01013	...000801
410116118-30	30	Baruffaldi	B	TBMR 160	ER-25A	1-16	43	55	83	70	50	63	2:1	D01013	...000801
410116075-30	30	Duplomatic	A	DIN 1809	ER-25A	1-16	43	55	83	70	50	63	2:1	D01013	...000801
410116078-30	30	Emco HT-665	B	DIN 5480	ER-25A	1-16	43	55	83	70	50	63	2:1	D01013	...000801
410120034-30	30	Emco HT-665	B	DIN 5480	ER-32	2-20	49	50	108	70	50	63	2:1	D01013	...000592
410116064-30	30	Okuma LT 200-M	B	1-step	ER-25A	1-16	43	55	83	70	50	63	2:1	D01013	...000801
410120036-30	30	Sauter	A	DIN 5480	ER-32	2-20	49	50	108	70	50	63	2:1	D01013	...000592
410116060-30	30	Sauter	B	DIN 5480	ER-25A	1-16	43	55	83	70	50	63	2:1	D01013	...000801
410120032-30	30	Sauter	B	DIN 5480	ER-32	2-20	49	50	108	70	50	63	2:1	D01013	...000592
410120031-30	30	Sauter	A	DIN 5482	ER-32	2-20	49	50	108	70	50	63	2:1	D01013	...000592
410120163-40	40	Baruffaldi	A	TBMA 200	ER-32	2-20	49	50	108	70	50	100	2:1	D01013	...000592
410120280-40	40	Baruffaldi	B	TBMR 200	ER-32	2-20	49	50	108	70	50	100	2:1	D01013	...000592
410120150-40	40	Duplomatic	A	DIN 1809	ER-32	2-20	49	50	108	70	50	100	2:1	D01013	...000592
410120205-40	40	Emag	B	DIN 1809	ER-32	2-20	49	50	108	70	50	100	2:1	D01013	...000592
410120194-40	40	Emco HT-690	B	DIN 5480	ER-32	2-20	49	50	108	70	50	100	2:1	D01013	...000592
410120125-40	40*	Mazak MP-6100	B	DIN 1809	ER-32	2-20	49	50	108	70	50	100	2:1	D01013	...000592
410120128-40	40*	Mazak MP-6200	B	DIN 1809	ER-32	2-20	49	50	108	70	50	100	2:1	D01013	...000592
410120132-40	40*	Mazak QTN-100M(S)	B	DIN 1809	ER-32	2-20	49	50	108	70	50	100	2:1	D01013	...000592
410120135-40	40*	Mazak QTN-200M(S)	B	DIN 1809	ER-32	2-20	49	50	108	70	50	100	2:1	D01013	...000592
410120146-40	40	Okuma LB 300-M	A	1-step	ER-32	2-20	49	50	108	70	50	100	2:1	D01013	...000592
410116035-40	40	Okuma LT 300-M	B	1-step	ER-25A	1-16	43	55	84	71	50	100	2:1	D01013	...000801
410120201-40	40	Sauter	A	DIN 5480	ER-32	2-20	49	50	108	70	50	100	2:1	D01013	...000592
410120165-40	40	Sauter	B	DIN 5480	ER-32	2-20	49	50	108	70	50	100	2:1	D01013	...000592
410120141-40	40	Sauter	A	DIN 5482	ER-32	2-20	49	50	108	70	50	100	2:1	D01013	...000592
410134012-50	50	Baruffaldi	A	TBMA 250	ER-50	10-34	87	78	169	123	75	200	2:1	D01012	...000612
410134013-50	50	Duplomatic	A	DIN 1809	ER-50	10-34	87	78	169	123	75	200	2:1	D01012	...000612
410134015-50	50	Okuma LU 35-M	A	1-step	ER-50	10-34	87	78	169	123	75	200	2:1	D01012	...000612
410134016-50	50	Sauter	A	DIN 5482	ER-50	10-34	87	78	169	123	75	200	2:1	D01012	...000612
410134050-60	60	Baruffaldi	A	TBMA 320	ER-50	10-34	87	78	169	123	75	200	2:1	D01012	...000612
410134027-60	60	Duplomatic	A	DIN 1809	ER-50	10-34	87	78	169	123	75	200	2:1	D01012	...000612
410134028-60	60	Okuma LU 45-M	A	1-step	ER-50	10-34	87	78	169	123	75	200	2:1	D01012	...000612
410134029-60	60	Sauter	A	DIN 5482	ER-50	10-34	87	78	169	123	75	200	2:1	D01012	...000612

*no VDI standard

© WTO GmbH • Subject to change without notice.

ООО "ПРОВЕРТ" www.prowert.ru info@prowert.ru +7 (495) 108-05-38

Straight offset drill/milling unit - for ER style collet
- Speed increaser -

Please select suitable turret specification from the Machine Type listing!
Typ A: Face mounted
Typ B: O. D. mounted
Ratio = 1:2 (speed increase)

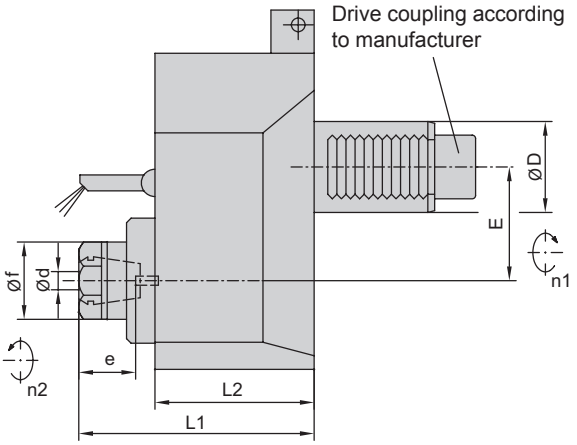

4101... (EC) with external coolant supply

Order wrenches separately!

Item No.	Turret specification				Clamping System				Dimensions / Data						Wrench
	∅D	Turret manufacturer	Type	Drive coupling	Size	∅d	e	∅f	L1	L2	E	M Nm	Ratio n1:n2		00675...
410113002-25	25	Emco 332	B	DIN 5480	ER-20A	1-13	37	47	78	63	35	16	1:2		...000887
410113003-25	25	Sauter	B	DIN 5480	ER-20A	1-13	37	47	78	63	35	16	1:2		...000887
410113019-30	30	Baruffaldi	A	TBMA 160	ER-20	1-13	42	34	95	70	50	25	1:2		...000591
410113039-30	30	Baruffaldi	B	TBMR 160	ER-20	1-13	42	34	95	70	50	25	1:2		...000591
410113020-30	30	Duplomatic	A	DIN 1809	ER-20	1-13	42	34	95	70	50	25	1:2		...000591
410113023-30	30	Emco HT-665	B	DIN 5480	ER-20	1-13	42	34	95	70	50	25	1:2		...000591
410113011-30	30	Okuma LT 200-M	B	1-step	ER-20	1-13	42	34	95	70	50	25	1:2		...000591
410113029-30	30	Sauter	A	DIN 5480	ER-20	1-13	42	34	95	70	50	25	1:2		...000591
410113010-30	30	Sauter	B	DIN 5480	ER-20	1-13	42	34	95	70	50	25	1:2		...000591
410113022-30	30	Sauter	A	DIN 5482	ER-20	1-13	42	34	95	70	50	25	1:2		...000591
410116061-40	40	Baruffaldi	A	TBMA 200	ER-25	1-16	42	42	105	70	50	40	1:2		...000720
410116063-40	40	Baruffaldi	B	TBMR 200	ER-25	1-16	42	42	105	70	50	40	1:2		...000720
410116065-40	40	Duplomatic	A	DIN 1809	ER-25	1-16	42	42	105	70	50	40	1:2		...000720
410113036-40	40	Emag	B	DIN 1809	ER-20	1-13	42	34	95	70	50	40	1:2		...000591
410116067-40	40	Emco HT-690	B	DIN 5480	ER-25	1-16	42	42	105	70	50	40	1:2		...000720
410116069-40	40*	Mazak MP-6100	B	DIN 1809	ER-25	1-16	42	42	105	70	50	40	1:2		...000720
410116071-40	40*	Mazak MP-6200	B	DIN 1809	ER-25	1-16	42	42	105	70	50	40	1:2		...000720
410116073-40	40*	Mazak QTN-100M(S)	B	DIN 1809	ER-25	1-16	42	42	105	70	50	40	1:2		...000720
410116075-40	40*	Mazak QTN-200M(S)	B	DIN 1809	ER-25	1-16	42	42	105	70	50	40	1:2		...000720
410116077-40	40	Okuma LB 300-M	A	1-step	ER-25	1-16	42	42	105	70	50	40	1:2		...000720
410113010-40	40	Okuma LT 300-M	B	1-step	ER-20	1-13	42	34	96	71	50	40	1:2		...000591
410116079-40	40	Okuma LVT 300-M	A	1-step	ER-25	1-16	42	42	105	70	50	40	1:2		...000720
410116081-40	40	Okuma LVT 400-M	A	1-step	ER-25	1-16	42	42	105	70	50	40	1:2		...000720
410116083-40	40	Sauter	A	DIN 5480	ER-25	1-16	42	42	105	70	50	40	1:2		...000720
410116085-40	40	Sauter	B	DIN 5480	ER-25	1-16	42	42	105	70	50	40	1:2		...000720
410116087-40	40	Sauter	A	DIN 5482	ER-25	1-16	42	42	105	70	50	40	1:2		...000720
410116015-50	50	Baruffaldi	A	TBMA 250	ER-25	1-16	42	42	105	70	50	50	1:2		...000720
410116035-50	50	Baruffaldi	B	TBMR 250	ER-25	1-16	42	42	105	70	50	50	1:2		...000720
410116016-50	50	Duplomatic	A	DIN 1809	ER-25	1-16	42	42	105	70	50	50	1:2		...000720
410116020-50	50	Emag	B	DIN 1809	ER-25	1-16	42	42	105	70	50	50	1:2		...000720
410116018-50	50	Okuma LU 35-M	A	1-step	ER-25	1-16	42	42	105	70	50	50	1:2		...000720
410116027-50	50	Sauter	A	DIN 5480	ER-25	1-16	42	42	105	70	50	50	1:2		...000720
410116029-50	50	Sauter	B	DIN 5480	ER-25	1-16	42	42	105	70	50	50	1:2		...000720
410116019-50	50	Sauter	A	DIN 5482	ER-25	1-16	42	42	105	70	50	50	1:2		...000720
410134051-60	60	Baruffaldi	A	TBMA 320	ER-50	10-34	87	78	169	123	75	100	1:2		...000612
410134021-60	60	Duplomatic	A	DIN 1809	ER-50	10-34	87	78	169	123	75	100	1:2		...000612
410134022-60	60	Okuma LU 45-M	A	1-step	ER-50	10-34	87	78	169	123	75	100	1:2		...000612
410134023-60	60	Sauter	A	DIN 5482	ER-50	10-34	87	78	169	123	75	100	1:2		...000612

*no VDI standard

© WTO GmbH • Subject to change without notice.
ООО "ПРОВЕРТ" www.prowert.ru info@prowert.ru +7 (495) 108-05-38

Straight offset drill/milling unit - for ER style collet - Speed increaser - HIGH PRESSURE

Please select suitable turret specification from the Machine Type listing!
Typ A: Face mounted
Typ B: O. D. mounted
Ratio = 1:2 (speed increase)
Max. coolant pressure = 1160 PSI (80 bar)

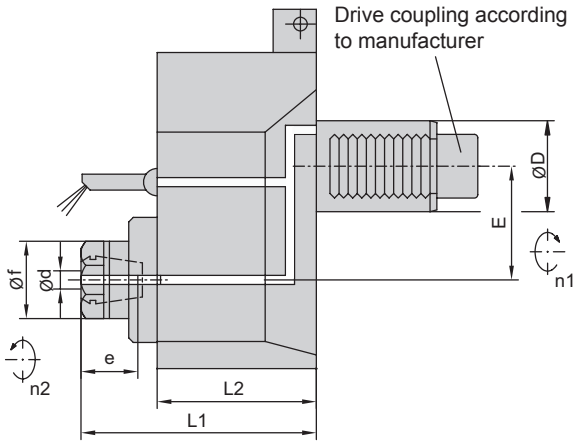

4101... (IC - HP) with internal + external coolant supply

Order wrenches separately!

Item No.	Turret specification				Clamping System				Dimensions / Data					Coolant	Wrench
	∅D	Turret manufacturer	Type	Drive coupling	Size	∅d	e	∅f	L1	L2	E	M Nm	Ratio n1:n2	Pressure diagram	00675...
410113015-30	30	Baruffaldi	A	TBMA 160	ER-20	1-13	42	34	95	70	50	25	1:2	D01013	...000591
410113040-30	30	Baruffaldi	B	TBMR 160	ER-20	1-13	42	34	95	70	50	25	1:2	D01013	...000591
410113016-30	30	Duplomatic	A	DIN 1809	ER-20	1-13	42	34	95	70	50	25	1:2	D01013	...000591
410113024-30	30	Emco HT-665	B	DIN 5480	ER-20	1-13	42	34	95	70	50	25	1:2	D01013	...000591
410113012-30	30	Okuma LT 200-M	B	1-step	ER-20	1-13	42	34	95	70	50	25	1:2	D01013	...000591
410113030-30	30	Sauter	A	DIN 5480	ER-20	1-13	42	34	95	70	50	25	1:2	D01013	...000591
410113009-30	30	Sauter	B	DIN 5480	ER-20	1-13	42	34	95	70	50	25	1:2	D01013	...000591
410113018-30	30	Sauter	A	DIN 5482	ER-20	1-13	42	34	95	70	50	25	1:2	D01013	...000591
410116062-40	40	Baruffaldi	A	TBMA 200	ER-25	1-16	42	42	105	70	50	40	1:2	D01013	...000720
410116064-40	40	Baruffaldi	B	TBMR 200	ER-25	1-16	42	42	105	70	50	40	1:2	D01013	...000720
410116066-40	40	Duplomatic	A	DIN 1809	ER-25	1-16	42	42	105	70	50	40	1:2	D01013	...000720
410113039-40	40	Emag	B	DIN 1809	ER-20	1-13	42	34	95	70	50	40	1:2	D01013	...000591
410116068-40	40	Emco HT-690	B	DIN 5480	ER-25	1-16	42	42	105	70	50	40	1:2	D01013	...000720
410116070-40	40*	Mazak MP-6100	B	DIN 1809	ER-25	1-16	42	42	105	70	50	40	1:2	D01013	...000720
410116072-40	40*	Mazak MP-6200	B	DIN 1809	ER-25	1-16	42	42	105	70	50	40	1:2	D01013	...000720
410116074-40	40*	Mazak QTN-100M(S)	B	DIN 1809	ER-25	1-16	42	42	105	70	50	40	1:2	D01013	...000720
410116076-40	40*	Mazak QTN-200M(S)	B	DIN 1809	ER-25	1-16	42	42	105	70	50	40	1:2	D01013	...000720
410116078-40	40	Okuma LB 300-M	A	1-step	ER-25	1-16	42	42	105	70	50	40	1:2	D01013	...000720
410113001-40	40	Okuma LT 300-M	B	1-step	ER-20	1-13	42	34	96	71	50	40	1:2	D01013	...000591
410116080-40	40	Okuma LVT 300-M	A	1-step	ER-25	1-16	42	42	105	70	50	40	1:2	D01013	...000720
410116082-40	40	Okuma LVT 400-M	A	1-step	ER-25	1-16	42	42	105	70	50	40	1:2	D01013	...000720
410116084-40	40	Sauter	A	DIN 5480	ER-25	1-16	42	42	105	70	50	40	1:2	D01013	...000720
410116086-40	40	Sauter	B	DIN 5480	ER-25	1-16	42	42	105	70	50	40	1:2	D01013	...000720
410116088-40	40	Sauter	A	DIN 5482	ER-25	1-16	42	42	105	70	50	40	1:2	D01013	...000720
410116021-50	50	Baruffaldi	A	TBMA 250	ER-25	1-16	42	42	105	70	50	50	1:2	D01013	...000720
410116036-50	50	Baruffaldi	B	TBMR 250	ER-25	1-16	42	42	105	70	50	50	1:2	D01013	...000720
410116022-50	50	Duplomatic	A	DIN 1809	ER-25	1-16	42	42	105	70	50	50	1:2	D01013	...000720
410116026-50	50	Emag	B	DIN 1809	ER-25	1-16	42	42	105	70	50	50	1:2	D01013	...000720
410116024-50	50	Okuma LU 35-M	A	1-step	ER-25	1-16	42	42	105	70	50	50	1:2	D01013	...000720
410116028-50	50	Sauter	A	DIN 5480	ER-25	1-16	42	42	105	70	50	50	1:2	D01013	...000720
410116030-50	50	Sauter	B	DIN 5480	ER-25	1-16	42	42	105	70	50	50	1:2	D01013	...000720
410116025-50	50	Sauter	A	DIN 5482	ER-25	1-16	42	42	105	70	50	50	1:2	D01013	...000720
410134052-60	60	Baruffaldi	A	TBMA 320	ER-50	10-34	87	78	169	123	75	100	1:2	D01012	...000612
410134018-60	60	Duplomatic	A	DIN 1809	ER-50	10-34	87	78	169	123	75	100	1:2	D01012	...000612
410134019-60	60	Okuma LU 45-M	A	1-step	ER-50	10-34	87	78	169	123	75	100	1:2	D01012	...000612
410134020-60	60	Sauter	A	DIN 5482	ER-50	10-34	87	78	169	123	75	100	1:2	D01012	...000612

*no VDI standard

© WTO GmbH • Subject to change without notice.

ООО "ПРОВЕРТ" www.prowert.ru info@prowert.ru +7 (495) 108-05-38

Right angle drill/milling unit - for ER style collet

Please select suitable turret specification from the Machine Type listing!
Typ A: Face mounted
Typ B: O. D. mounted
Ratio = 1:1 180° reversible head

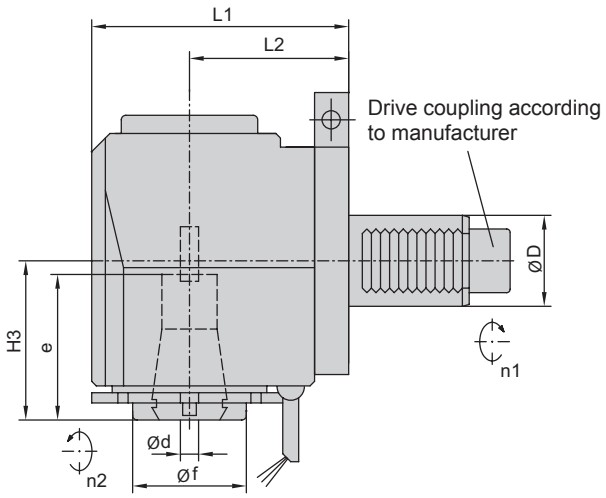

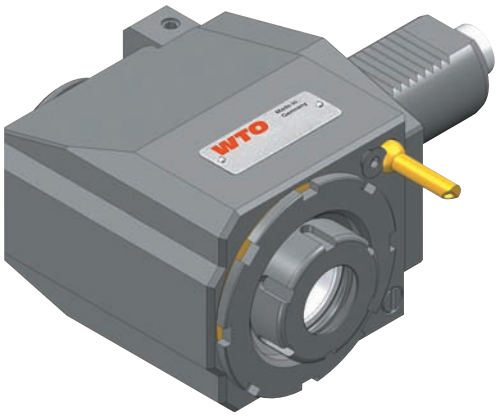

4105... (EC) with external coolant supply

Order wrenches separately!

Item No.	Turret specification				Clamping System				Dimensions / Data						Wrench
	ØD	Turret manufacturer	Type	Drive coupling	Size	Ød	e	Øf	L1	L2	H3	M Nm	Ratio n1:n2		00675...
410516012-25	25	Sauter	B	DIN 5480	ER-25A	1-16	48	55	109	75	56	20	1:1		...000801
410516081-30	30	Baruffaldi	A	TBMA 160	ER-25A	1-16	48	55	89	55	56	32	1:1		...000801
410516195-30	30	Baruffaldi	B	TBMR 160	ER-25A	1-16	48	55	144	110	56	32	1:1		...000801
410516053-30	30	Duplomatic	A	DIN 1809	ER-25A	1-16	48	55	89	55	56	32	1:1		...000801
410516078-30	30	Emco HT-665	B	DIN 5480	ER-25A	1-16	48	55	134	100	56	32	1:1		...000801
410516148-30	30	Okuma LT 200-M[1)]	B	1-step	ER-25A	1-16	48	55	124	90	60	32	1:1		...000801
410516128-30	30	Sauter	A	DIN 5480	ER-25A	1-16	48	55	89	55	56	32	1:1		...000801
410516082-30	30	Sauter (L2=85)	B	DIN 5480	ER-25A	1-16	48	55	119	85	56	32	1:1		...000801
410516033-30	30	Sauter (L2=100)	B	DIN 5480	ER-25A	1-16	48	55	134	100	56	32	1:1		...000801
410516037-30	30	Sauter	A	DIN 5482	ER-25A	1-16	48	55	89	55	56	32	1:1		...000801
410520107-40	40	Baruffaldi[1)]	A	TBMA 200	ER-32	2-20	70	50	113	70	70	63	1:1		...000490
410520298-40	40	Baruffaldi[1)]	B	TBMR 200	ER-32	2-20	70	50	143	100	70	63	1:1		...000490
410520066-40	40	Duplomatic[1)]	A	DIN 1809	ER-32	2-20	70	50	113	70	70	63	1:1		...000490
410520195-40	40	Emco HT-690[1)]	B	DIN 5480	ER-32	2-20	70	50	143	100	70	63	1:1		...000490
410520181-40	40	Haas (L=104.85)[1)]	A	1-step	ER-32	2-20	70	50	113	70	70	63	1:1		...000490
410520183-40	40	Haas (L=117.55)[1)]	A	1-step	ER-32	2-20	70	50	113	70	70	63	1:1		...000490
410520187-40	40	Haas (L=130.25)[1)]	A	1-step	ER-32	2-20	70	50	113	70	70	63	1:1		...000490
410520076-40	40*	Mazak MP-6100	B	DIN 1809	ER-32	2-20	70	50	152	115	94	63	1:1		...000743
410520067-40	40*	Mazak MP-6200	B	DIN 1809	ER-32	2-20	70	50	167	130	94	63	1:1		...000743
410520106-40	40*	Mazak QTN-100M(S)	B	DIN 1809	ER-32	2-20	70	50	137	100	94	63	1:1		...000743
410520063-40	40*	Mazak QTN-200M(S)	B	DIN 1809	ER-32	2-20	70	50	167	130	94	63	1:1		...000743
410520041-40	40	Okuma LB 300-M[1)]	A	1-step	ER-32	2-20	70	50	113	70	70	63	1:1		...000490
410520033-40	40	Okuma LT 300-M[1)]	B	1-step	ER-32	2-20	70	50	133	90	70	63	1:1		...000490
410520225-40	40	Okuma LVT 300-M[1)]	A	1-step	ER-32	2-20	70	50	113	70	70	63	1:1		...000490
410526033-40	40	Okuma LVT 400-M[1)]	A	1-step	ER-40	3-26	75	63	113	70	85	63	1:1		...000491
410520215-40	40	Sauter[1)]	A	DIN 5480	ER-32	2-20	70	50	113	70	70	63	1:1		...000490
410520108-40	40	Sauter (L2=100)[1)]	B	DIN 5480	ER-32	2-20	70	50	143	100	70	63	1:1		...000490
410520208-40	40	Sauter (L2=120)	B	DIN 5480	ER-32	2-20	70	50	157	120	94	63	1:1		...000743
410520088-40	40	Sauter[1)]	A	DIN 5482	ER-32	2-20	70	50	113	70	70	63	1:1		...000490
410526001-50	50	Baruffaldi[1)]	A	TBMA 250	ER-40	3-26	75	63	113	70	85	80	1:1		...000491
410526075-50	50	Baruffaldi[1)]	B	TBMR 250	ER-40	3-26	75	63	153	110	85	80	1:1		...000491
410526004-50	50	Duplomatic[1)]	A	DIN 1809	ER-40	3-26	75	63	113	70	85	80	1:1		...000491
410520014-50	50	Emag[1)]	B	DIN 1809	ER-32	2-20	70	50	133	90	70	80	1:1		...000490
410526030-50	50*	Mazak MP-6300	B	DIN 1809	ER-40	3-26	75	63	224	175	120	80	1:1		...000744
410526078-50	50*	Mazak QTN-300M	B	DIN 1809	ER-40	3-26	75	63	209	160	120	80	1:1		...000744
410526034-50	50	Okuma LU 35-M[1)]	A	1-step	ER-40	3-26	75	63	113	70	85	80	1:1		...000491
410526052-50	50	Sauter[1)]	A	DIN 5480	ER-40	3-26	75	63	153	110	85	80	1:1		...000491
410526050-50	50	Sauter[1)]	B	DIN 5480	ER-40	3-26	75	63	153	110	85	80	1:1		...000491
410526000-50	50	Sauter[1)]	A	DIN 5482	ER-40	3-26	75	63	113	70	85	80	1:1		...000491

*no VDI standard 1) direction of rotation: n1 = n2

© WTO GmbH • Subject to change without notice.
ООО "ПРОВЕРТ" www.prowert.ru info@prowert.ru +7 (495) 108-05-38

Right angle drill/milling unit - for ER style collet
- HIGH PRESSURE -

Please select suitable turret specification from the Machine Type listing!
Typ A: Face mounted
Typ B: O. D. mounted
Ratio = 1:1 180° reversible head
Max. coolant pressure = 1160 PSI (80 bar)

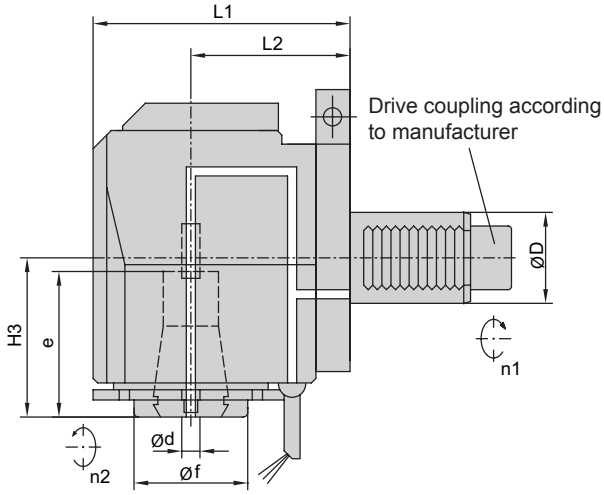

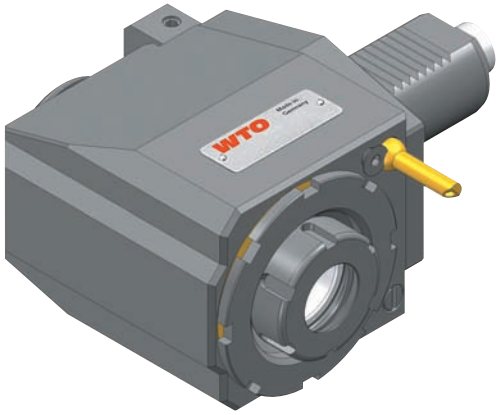

4105... (IC - HP) with internal + external coolant supply

Order wrenches separately!

Item No.	Turret specification				Clamping System				Dimensions / Data					Coolant	Wrench
	ØD	Turret manufacturer	Type	Drive coupling	Size	Ød	e	Øf	L1	L2	H3	M Nm	Ratio n1:n2	Pressure diagram	00675...
410516013-25	25	Sauter	B	DIN 5480	ER-25A	1-16	48	55	109	75	56	20	1:1	D01013	...000801
410516094-30	30	Baruffaldi	A	TBMA 160	ER-25A	1-16	48	55	89	55	56	32	1:1	D01013	...000801
410516196-30	30	Baruffaldi	B	TBMR 160	ER-25A	1-16	48	55	144	110	56	32	1:1	D01013	...000801
410516095-30	30	Duplomatic	A	DIN 1809	ER-25A	1-16	48	55	89	55	56	32	1:1	D01013	...000801
410516113-30	30	Emco HT-665	B	DIN 5480	ER-25A	1-16	48	55	134	100	56	32	1:1	D01013	...000801
410516117-30	30	Okuma LT 200-M[1)]	B	1-step	ER-25A	1-16	48	55	124	90	60	32	1:1	D01013	...000801
410516130-30	30	Sauter	A	DIN 5480	ER-25A	1-16	48	55	89	55	56	32	1:1	D01013	...000801
410516098-30	30	Sauter (L2=85)	B	DIN 5480	ER-25A	1-16	48	55	119	85	56	32	1:1	D01013	...000801
410516099-30	30	Sauter (L2=100)	B	DIN 5480	ER-25A	1-16	48	55	134	100	56	32	1:1	D01013	...000801
410516097-30	30	Sauter	A	DIN 5482	ER-25A	1-16	48	55	89	55	56	32	1:1	D01013	...000801
410520129-40	40	Baruffaldi[1)]	A	TBMA 200	ER-32	2-20	70	50	113	70	70	63	1:1	D01013	...000490
410520347-40	40	Baruffaldi[1)]	B	TBMR 200	ER-32	2-20	70	50	143	100	70	63	1:1	D01013	...000490
410520130-40	40	Duplomatic[1)]	A	DIN 1809	ER-32	2-20	70	50	113	70	70	63	1:1	D01013	...000490
410520200-40	40	Emco HT-690[1)]	B	DIN 5480	ER-32	2-20	70	50	143	100	70	63	1:1	D01013	...000490
410520180-40	40	Haas (L=104.85)[1)]	A	1-step	ER-32	2-20	70	50	113	70	70	63	1:1	D01013	...000490
410520182-40	40	Haas (L=117.55)[1)]	A	1-step	ER-32	2-20	70	50	113	70	70	63	1:1	D01013	...000490
410520186-40	40	Haas (L=130.25)[1)]	A	1-step	ER-32	2-20	70	50	113	70	70	63	1:1	D01013	...000490
410520131-40	40*	Mazak MP-6100	B	DIN 1809	ER-32	2-20	70	50	152	115	94	63	1:1	D01013	...000743
410520132-40	40*	Mazak MP-6200	B	DIN 1809	ER-32	2-20	70	50	167	130	94	63	1:1	D01013	...000743
410520133-40	40*	Mazak QTN-100M(S)	B	DIN 1809	ER-32	2-20	70	50	137	100	94	63	1:1	D01013	...000743
410520134-40	40*	Mazak QTN-200M(S)	B	DIN 1809	ER-32	2-20	70	50	167	130	94	63	1:1	D01013	...000743
410520042-40	40	Okuma LB 300-M[1)]	A	1-step	ER-32	2-20	70	50	113	70	70	63	1:1	D01013	...000490
410520135-40	40	Okuma LT 300-M[1)]	B	1-step	ER-32	2-20	70	50	133	90	70	63	1:1	D01013	...000490
410520226-40	40	Okuma LVT 300-M[1)]	A	1-step	ER-32	2-20	70	50	113	70	70	63	1:1	D01013	...000490
410526034-40	40	Okuma LVT 400-M[1)]	A	1-step	ER-40	3-26	75	63	113	70	85	63	1:1	D01013	...000491
410520217-40	40	Sauter[1)]	A	DIN 5480	ER-32	2-20	70	50	113	70	70	63	1:1	D01013	...000490
410520136-40	40	Sauter (L2=100)[1)]	B	DIN 5480	ER-32	2-20	70	50	143	100	70	63	1:1	D01013	...000490
410520210-40	40	Sauter (L2=120)	B	DIN 5480	ER-32	2-20	70	50	157	120	94	63	1:1	D01013	...000743
410520089-40	40	Sauter[1)]	A	DIN 5482	ER-32	2-20	70	50	113	70	70	63	1:1	D01013	...000490
410526035-50	50	Baruffaldi[1)]	A	TBMA 250	ER-40	3-26	75	63	113	70	85	80	1:1	D01013	...000491
410526076-50	50	Baruffaldi[1)]	B	TBMR 250	ER-40	3-26	75	63	153	110	85	80	1:1	D01013	...000491
410526003-50	50	Duplomatic[1)]	A	DIN 1809	ER-40	3-26	75	63	113	70	85	80	1:1	D01013	...000491
410520023-50	50	Emag[1)]	B	DIN 1809	ER-32	2-20	70	50	133	90	70	80	1:1	D01013	...000490
410526031-50	50*	Mazak MP-6300	B	DIN 1809	ER-40	3-26	75	63	224	175	120	80	1:1	D01012	...000744
410526063-50	50*	Mazak QTN-300M	B	DIN 1809	ER-40	3-26	75	63	209	160	120	80	1:1	D01012	...000744
410526037-50	50	Okuma LU 35-M[1)]	A	1-step	ER-40	3-26	75	63	113	70	85	80	1:1	D01013	...000491
410526054-50	50	Sauter[1)]	A	DIN 5480	ER-40	3-26	75	63	153	110	85	80	1:1	D01013	...000491
410526051-50	50	Sauter[1)]	B	DIN 5480	ER-40	3-26	75	63	153	110	85	80	1:1	D01013	...000491
410526009-50	50	Sauter[1)]	A	DIN 5482	ER-40	3-26	75	63	113	70	85	80	1:1	D01013	...000491

*no VDI standard 1) direction of rotation: n1 = n2

© WTO GmbH • Subject to change without notice.

ООО "ПРОВЕРТ" www.prowert.ru info@prowert.ru +7 (495) 108-05-38

Right angle drill/milling unit - for ER style collet
- Torque increaser -

Please select suitable turret specification from the Machine Type listing!
Typ A: Face mounted
Typ B: O. D. mounted
Ratio = 2:1 (speed reduction) 180° reversible head

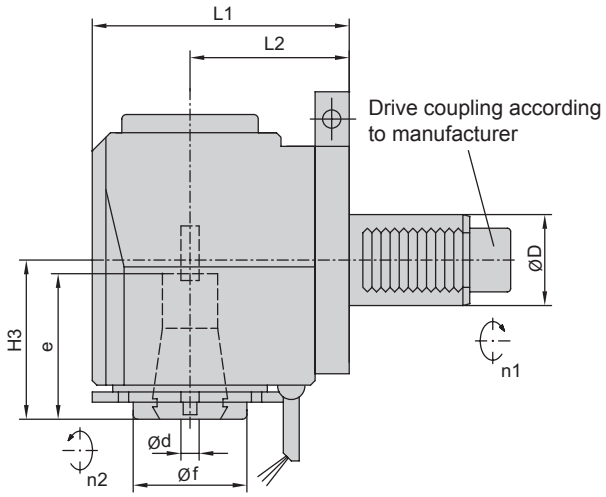

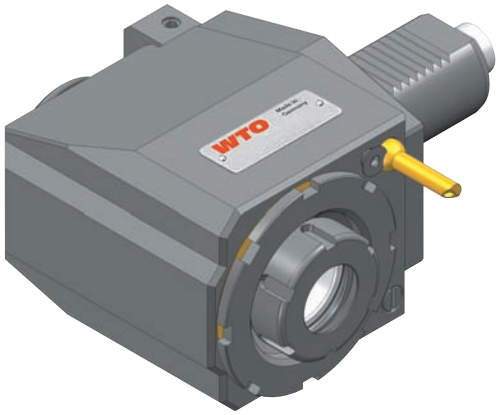

4105... (EC) with external coolant supply

Order wrenches separately!

Item No.	Turret specification				Clamping System				Dimensions / Data						Wrench
	ØD	Turret manufacturer	Type	Drive coupling	Size	Ød	e	Øf	L1	L2	H3	M Nm	Ratio n1:n2		00675...
410516020-25	25	Sauter	B	DIN 5480	ER-25A	1-16	48	55	109	75	56	40	2:1		...000801
410516083-30	30	Baruffaldi	A	TBMA 160	ER-25A	1-16	48	55	89	55	56	50	2:1		...000801
410516204-30	30	Baruffaldi	B	TBMR 160	ER-25A	1-16	48	55	144	110	56	50	2:1		...000801
410516084-30	30	Duplomatic	A	DIN 1809	ER-25A	1-16	48	55	89	55	56	50	2:1		...000801
410516114-30	30	Emco HT-665	B	DIN 5480	ER-25A	1-16	48	55	134	100	56	50	2:1		...000801
410516150-30	30	Okuma LT 200-M[1)]	B	1-step	ER-25A	1-16	48	55	124	90	60	50	2:1		...000801
410516131-30	30	Sauter	A	DIN 5480	ER-25A	1-16	48	55	89	55	56	50	2:1		...000801
410516088-30	30	Sauter (L2=85)	B	DIN 5480	ER-25A	1-16	48	55	119	85	56	50	2:1		...000801
410516013-30	30	Sauter (L2=100)	B	DIN 5480	ER-25A	1-16	48	55	134	100	56	50	2:1		...000801
410516087-30	30	Sauter	A	DIN 5482	ER-25A	1-16	48	55	89	55	56	50	2:1		...000801
410520109-40	40	Baruffaldi[1)]	A	TBMA 200	ER-32	2-20	70	50	113	70	70	80	2:1		...000490
410520299-40	40	Baruffaldi[1)]	B	TBMR 200	ER-32	2-20	70	50	143	100	70	80	2:1		...000490
410520110-40	40	Duplomatic[1)]	A	DIN 1809	ER-32	2-20	70	50	113	70	70	80	2:1		...000490
410520205-40	40	Emco HT-690[1)]	B	DIN 5480	ER-32	2-20	70	50	143	100	70	80	2:1		...000490
410520111-40	40*	Mazak MP-6100	B	DIN 1809	ER-32	2-20	70	50	153	115	94	70	2:1		...000743
410520112-40	40*	Mazak MP-6200	B	DIN 1809	ER-32	2-20	70	50	168	130	94	70	2:1		...000743
410520113-40	40*	Mazak QTN-100M(S)	B	DIN 1809	ER-32	2-20	70	50	138	100	94	70	2:1		...000743
410520114-40	40*	Mazak QTN-200M(S)	B	DIN 1809	ER-32	2-20	70	50	168	130	94	70	2:1		...000743
410520115-40	40	Okuma LT 300-M[1)]	B	1-step	ER-32	2-20	70	50	133	90	70	80	2:1		...000490
410520250-40	40	Okuma LVT 300-M[1)]	A	1-step	ER-32	2-20	70	50	113	70	70	80	2:1		...000490
410520218-40	40	Sauter[1)]	A	DIN 5480	ER-32	2-20	70	50	113	70	70	80	2:1		...000490
410520117-40	40	Sauter (L2=100)[1)]	B	DIN 5480	ER-32	2-20	70	50	143	100	70	80	2:1		...000490
410520211-40	40	Sauter (L2=120)	B	DIN 5480	ER-32	2-20	70	50	158	120	94	70	2:1		...000743
410520118-40	40	Sauter[1)]	A	DIN 5482	ER-32	2-20	70	50	113	70	70	80	2:1		...000490
410526013-40	40	Sauter[1)]	A	DIN 5482	ER-40	3-26	75	63	113	70	85	80	2:1		...000491

*no VDI standard
1) direction of rotation: n1 = n2

© WTO GmbH • Subject to change without notice.
ООО "ПРОВЕРТ" www.prowert.ru info@prowert.ru +7 (495) 108-05-38

Right angle drill/milling unit - for ER style collet -
- Torque increaser - HIGH PRESSURE

Please select suitable turret specification from the Machine Type listing!
Typ A: Face mounted
Typ B: O. D. mounted
Ratio = 2:1 (speed reduction) 180° reversible head
Max. coolant pressure = 1160 PSI (80 bar)

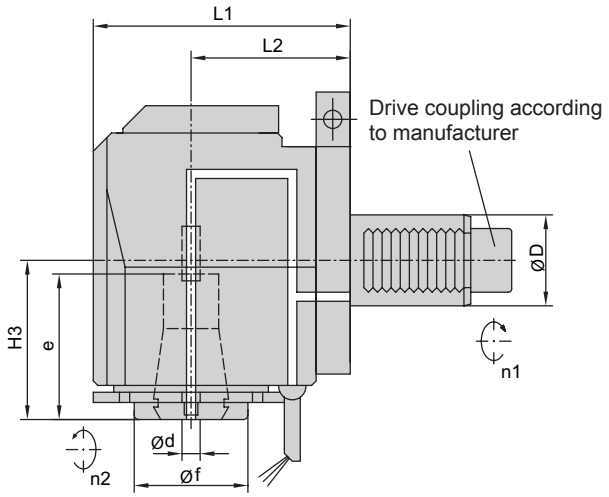

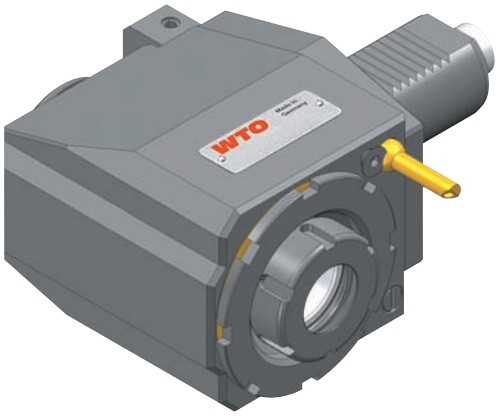

4105... (IC - HP) with internal + external coolant supply

Order wrenches separately!

Item No.	Turret specification				Clamping System				Dimensions / Data					Coolant	Wrench
	ØD	Turret manufacturer	Type	Drive coupling	Size	Ød	e	Øf	L1	L2	H3	M Nm	Ratio n1:n2	Pressure diagram	00675...
410516021-25	25	Sauter	B	DIN 5480	ER-25A	1-16	48	55	109	75	56	40	2:1	D01013	...000801
410516089-30	30	Baruffaldi	A	TBMA 160	ER-25A	1-16	48	55	89	55	56	50	2:1	D01013	...000801
410516205-30	30	Baruffaldi	B	TBMR160	ER-25A	1-16	48	55	144	110	56	50	2:1	D01013	...000801
410516090-30	30	Duplomatic	A	DIN 1809	ER-25A	1-16	48	55	89	55	56	50	2:1	D01013	...000801
410516115-30	30	Emco HT-665	B	DIN 5480	ER-25A	1-16	48	55	134	100	56	50	2:1	D01013	...000801
410516151-30	30	Okuma LT 200-M[1)]	B	1-step	ER-25A	1-16	48	55	124	90	60	50	2:1	D01013	...000801
410516132-30	30	Sauter	A	DIN 5480	ER-25A	1-16	48	55	89	55	56	50	2:1	D01013	...000801
410516093-30	30	Sauter (L2=85)	B	DIN 5480	ER-25A	1-16	48	55	119	85	56	50	2:1	D01013	...000801
410516012-30	30	Sauter (L2=100)	B	DIN 5480	ER-25A	1-16	48	55	134	100	56	50	2:1	D01013	...000801
410516092-30	30	Sauter	A	DIN 5482	ER-25A	1-16	48	55	89	55	56	50	2:1	D01013	...000801
410520119-40	40	Baruffaldi[1)]	A	TBMA 200	ER-32	2-20	70	50	113	70	70	80	2:1	D01013	...000490
410520350-40	40	Baruffaldi[1)]	B	TBMR 200	ER-32	2-20	70	50	143	100	70	80	2:1	D01013	...000490
410520120-40	40	Duplomatic[1)]	A	DIN 1809	ER-32	2-20	70	50	113	70	70	80	2:1	D01013	...000490
410520207-40	40	Emco HT-690[1)]	B	DIN 5480	ER-32	2-20	70	50	143	100	70	80	2:1	D01013	...000490
410520121-40	40*	Mazak MP-6100	B	DIN 1809	ER-32	2-20	70	50	153	115	94	70	2:1	D01013	...000743
410520122-40	40*	Mazak MP-6200	B	DIN 1809	ER-32	2-20	70	50	168	130	94	70	2:1	D01013	...000743
410520123-40	40*	Mazak QTN-100M(S)	B	DIN 1809	ER-32	2-20	70	50	138	100	94	70	2:1	D01013	...000743
410520124-40	40*	Mazak QTN-200M(S)	B	DIN 1809	ER-32	2-20	70	50	168	130	94	70	2:1	D01013	...000743
410520125-40	40	Okuma LT 300-M[1)]	B	1-step	ER-32	2-20	70	50	133	90	70	80	2:1	D01013	...000490
410520251-40	40	Okuma LVT 300-M[1)]	A	1-step	ER-32	2-20	70	50	113	70	70	80	2:1	D01013	...000490
410520219-40	40	Sauter[1)]	A	DIN 5480	ER-32	2-20	70	50	113	70	70	80	2:1	D01013	...000490
410520127-40	40	Sauter (L2=100)[1)]	B	DIN 5480	ER-32	2-20	70	50	143	100	70	80	2:1	D01013	...000490
410520212-40	40	Sauter (L2=120)	B	DIN 5480	ER-32	2-20	70	50	158	120	94	70	2:1	D01013	...000743
410520128-40	40	Sauter[1)]	A	DIN 5482	ER-32	2-20	70	50	113	70	70	80	2:1	D01013	...000490
410526016-40	40	Sauter[1)]	A	DIN 5482	ER-40	3-26	75	63	113	70	85	80	2:1	D01013	...000491

*no VDI standard
1) direction of rotation: n1 = n2

© WTO GmbH • Subject to change without notice.

ООО "ПРОВЕРТ" www.prowert.ru info@prowert.ru +7 (495) 108-05-38

Right angle drill/milling unit - for ER style collet
- Speed increaser -

Please select suitable turret specification from the Machine Type listing!
Typ A: Face mounted
Typ B: O. D. mounted
Ratio = 1:2 (speed increase) 180° reversible head

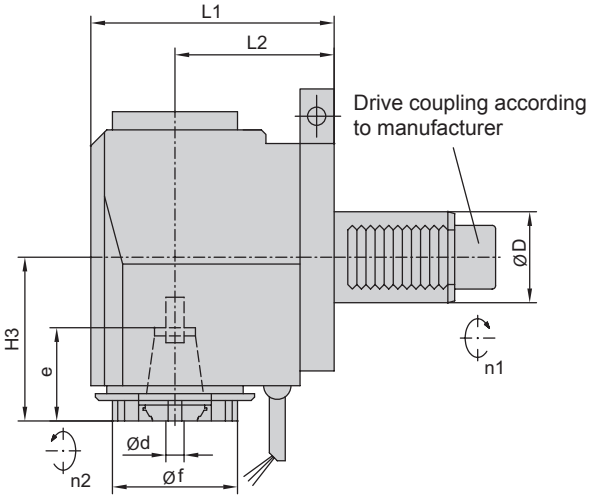

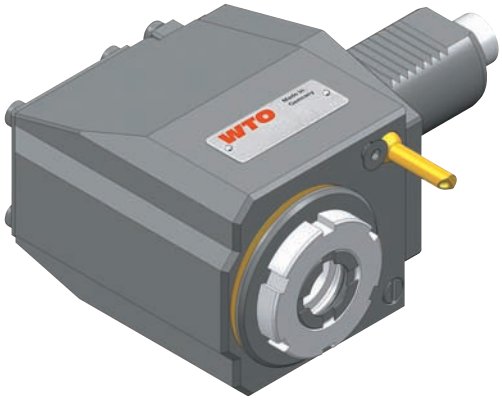

4105... (EC) with external coolant supply

Order wrenches separately!

Item No.	Turret specification				Clamping System				Dimensions / Data						Wrench
	ØD	Turret manufacturer	Type	Drive coupling	Size	Ød	e	Øf	L1	L2	H3	M Nm	Ratio n1:n2		00675...
410513015-25	25	Emco 332	B	DIN 5480	ER-20A	1-13	45	55	104	75	56	15	1:2		...000833
410513013-25	25	Sauter	B	DIN 5480	ER-20A	1-13	45	55	104	75	56	15	1:2		...000833
410513016-30	30	Baruffaldi	A	TBMA 160	ER-20A	1-13	45	55	99	70	56	15	1:2		...000833
410513047-30	30	Baruffaldi	B	TBMR 160	ER-20A	1-13	45	55	139	110	56	15	1:2		...000833
410513017-30	30	Duplomatic	A	DIN 1809	ER-20A	1-13	45	55	99	70	56	15	1:2		...000833
410513030-30	30	Emco HT-665	B	DIN 5480	ER-20A	1-13	45	55	129	100	56	15	1:2		...000833
410513037-30	30	Okuma LT 200-M	B	1-step	ER-20A	1-13	45	55	119	90	56	15	1:2		...000833
410513032-30	30	Sauter	A	DIN 5480	ER-20A	1-13	45	55	99	70	56	15	1:2		...000833
410513020-30	30	Sauter (L2=85)	B	DIN 5480	ER-20A	1-13	45	55	114	85	56	15	1:2		...000833
410513021-30	30	Sauter (L2=100)	B	DIN 5480	ER-20A	1-13	45	55	129	100	56	15	1:2		...000833
410513019-30	30	Sauter	A	DIN 5482	ER-20A	1-13	45	55	99	70	56	15	1:2		...000833
410516060-40	40	Baruffaldi	A	TBMA 200	ER-25A	1-16	41	55	108	70	72	40	1:2		...000801
410516133-40	40	Baruffaldi	B	TBMR 200	ER-25A	1-16	41	55	137	100	72	40	1:2		...000801
410516062-40	40	Duplomatic	A	DIN 1809	ER-25A	1-16	41	55	108	70	72	40	1:2		...000801
410516095-40	40	Emag	B	DIN 1809	ER-25A	1-16	41	55	112	75	72	40	1:2		...000801
410516082-40	40	Emco HT-690	B	DIN 5480	ER-25A	1-16	41	55	137	100	72	40	1:2		...000801
410516064-40	40*	Mazak MP-6100	B	DIN 1809	ER-25A	1-16	41	55	152	115	72	40	1:2		...000801
410516066-40	40*	Mazak MP-6200	B	DIN 1809	ER-25A	1-16	41	55	167	130	72	40	1:2		...000801
410516068-40	40*	Mazak QTN-100M(S)	B	DIN 1809	ER-25A	1-16	41	55	137	100	72	40	1:2		...000801
410516070-40	40*	Mazak QTN-200M(S)	B	DIN 1809	ER-25A	1-16	41	55	167	130	72	40	1:2		...000801
410516074-40	40	Okuma LB 300-M	A	1-step	ER-25A	1-16	41	55	108	70	72	40	1:2		...000801
410516072-40	40	Okuma LT 300-M	B	1-step	ER-25A	1-16	41	55	127	90	72	40	1:2		...000801
410516058-40	40	Sauter	A	DIN 5480	ER-25A	1-16	41	55	108	70	72	40	1:2		...000801
410516054-40	40	Sauter (L2=100)	B	DIN 5480	ER-25A	1-16	41	55	137	100	72	40	1:2		...000801
410516056-40	40	Sauter (L2=120)	B	DIN 5480	ER-25A	1-16	41	55	157	120	72	40	1:2		...000801
410516084-40	40	Sauter	A	DIN 5482	ER-25A	1-16	41	55	108	70	72	40	1:2		...000801
410516000-50	50	Baruffaldi	A	TBMA 250	ER-25A	1-16	41	55	108	70	72	40	1:2		...000801
410516025-50	50	Baruffaldi	B	TBMR 250	ER-25A	1-16	41	55	147	110	72	40	1:2		...000801
410516001-50	50	Duplomatic	A	DIN 1809	ER-25A	1-16	41	55	108	70	72	40	1:2		...000801
410516002-50	50	Emag	B	DIN 1809	ER-25A	1-16	41	55	127	90	72	40	1:2		...000801
410516004-50	50	Okuma LU 35-M	A	1-step	ER-25A	1-16	41	55	108	70	72	40	1:2		...000801
410516014-50	50	Sauter	A	DIN 5480	ER-25A	1-16	41	55	147	110	72	40	1:2		...000801
410516013-50	50	Sauter	B	DIN 5480	ER-25A	1-16	41	55	147	110	72	40	1:2		...000801
410516005-50	50	Sauter	A	DIN 5482	ER-25A	1-16	41	55	108	70	72	40	1:2		...000801

*no VDI standard

© WTO GmbH • Subject to change without notice.
ООО "ПРОВЕРТ" www.prowert.ru info@prowert.ru +7 (495) 108-05-38

Right angle drill/milling unit - for ER style collet
- Speed increaser - HIGH PRESSURE

Please select suitable turret specification from the Machine Type listing!
Typ A: Face mounted
Typ B: O. D. mounted
Ratio = 1:2 (speed increase)
Max. coolant pressure = 1160 PSI (80 bar)

180° reversible head

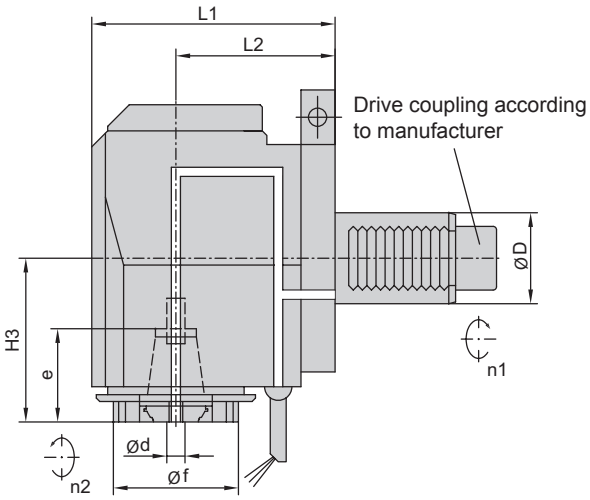

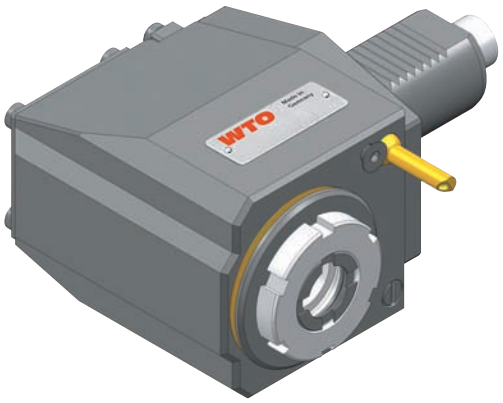

4105... (IC - HP) with internal + external coolant supply

Order wrenches separately!

Item No.	Turret specification				Clamping System				Dimensions / Data					Coolant	Wrench
	ØD	Turret manufacturer	Type	Drive coupling	Size	Ød	e	Øf	L1	L2	H3	M Nm	Ratio n1:n2	Pressure diagram	00675...
410513016-25	25	Emco 332	B	DIN 5480	ER-20A	1-13	45	55	104	75	56	15	1:2	D01013	...000833
410513014-25	25	Sauter	B	DIN 5480	ER-20A	1-13	45	55	104	75	56	15	1:2	D01013	...000833
410513022-30	30	Baruffaldi	A	TBMA 160	ER-20A	1-13	45	55	99	70	56	15	1:2	D01013	...000833
410513048-30	30	Baruffaldi	B	TBMR 160	ER-20A	1-13	45	55	139	110	56	15	1:2	D01013	...000833
410513023-30	30	Duplomatic	A	DIN 1809	ER-20A	1-13	45	55	99	70	56	15	1:2	D01013	...000833
410513031-30	30	Emco HT-665	B	DIN 5480	ER-20A	1-13	45	55	129	100	56	15	1:2	D01013	...000833
410513038-30	30	Okuma LT 200-M	B	1-step	ER-20A	1-13	45	55	119	90	56	15	1:2	D01013	...000833
410513033-30	30	Sauter	A	DIN 5480	ER-20A	1-13	45	55	99	70	56	15	1:2	D01013	...000833
410513026-30	30	Sauter (L2=85)	B	DIN 5480	ER-20A	1-13	45	55	114	85	56	15	1:2	D01013	...000833
410513027-30	30	Sauter (L2=100)	B	DIN 5480	ER-20A	1-13	45	55	129	100	56	15	1:2	D01013	...000833
410513025-30	30	Sauter	A	DIN 5482	ER-20A	1-13	45	55	99	70	56	15	1:2	D01013	...000833
410516061-40	40	Baruffaldi	A	TBMA 200	ER-25A	1-16	41	55	108	70	72	40	1:2	D01013	...000801
410516134-40	40	Baruffaldi	B	TBMR 200	ER-25A	1-16	41	55	137	100	72	40	1:2	D01013	...000801
410516063-40	40	Duplomatic	A	DIN 1809	ER-25A	1-16	41	55	108	70	72	40	1:2	D01013	...000801
410516096-40	40	Emag	B	DIN 1809	ER-25A	1-16	41	55	112	75	72	40	1:2	D01013	...000801
410516083-40	40	Emco HT-690	B	DIN 5480	ER-25A	1-16	41	55	137	100	72	40	1:2	D01013	...000801
410516065-40	40*	Mazak MP-6100	B	DIN 1809	ER-25A	1-16	41	55	152	115	72	40	1:2	D01013	...000801
410516067-40	40*	Mazak MP-6200	B	DIN 1809	ER-25A	1-16	41	55	167	130	72	40	1:2	D01013	...000801
410516069-40	40*	Mazak QTN-100M(S)	B	DIN 1809	ER-25A	1-16	41	55	137	100	72	40	1:2	D01013	...000801
410516071-40	40*	Mazak QTN-200M(S)	B	DIN 1809	ER-25A	1-16	41	55	167	130	72	40	1:2	D01013	...000801
410516075-40	40	Okuma LB 300-M	A	1-step	ER-25A	1-16	41	55	108	70	72	40	1:2	D01013	...000801
410516073-40	40	Okuma LT 300-M	B	1-step	ER-25A	1-16	41	55	127	90	72	40	1:2	D01013	...000801
410516059-40	40	Sauter	A	DIN 5480	ER-25A	1-16	41	55	108	70	72	40	1:2	D01013	...000801
410516055-40	40	Sauter (L2=100)	B	DIN 5480	ER-25A	1-16	41	55	137	100	72	40	1:2	D01013	...000801
410516057-40	40	Sauter (L2=120)	B	DIN 5480	ER-25A	1-16	41	55	157	120	72	40	1:2	D01013	...000801
410516085-40	40	Sauter	A	DIN 5482	ER-25A	1-16	41	55	108	70	72	40	1:2	D01013	...000801
410516006-50	50	Baruffaldi	A	TBMA 250	ER-25A	1-16	41	55	108	70	72	40	1:2	D01013	...000801
410516026-50	50	Baruffaldi	B	TBMR 250	ER-25A	1-16	41	55	147	110	72	40	1:2	D01013	...000801
410516007-50	50	Duplomatic	A	DIN 1809	ER-25A	1-16	41	55	108	70	72	40	1:2	D01013	...000801
410516008-50	50	Emag	B	DIN 1809	ER-25A	1-16	41	55	127	90	72	40	1:2	D01013	...000801
410516010-50	50	Okuma LU 35-M	A	1-step	ER-25A	1-16	41	55	108	70	72	40	1:2	D01013	...000801
410516015-50	50	Sauter	A	DIN 5480	ER-25A	1-16	41	55	147	110	72	40	1:2	D01013	...000801
410516016-50	50	Sauter	B	DIN 5480	ER-25A	1-16	41	55	147	110	72	40	1:2	D01013	...000801
410516011-50	50	Sauter	A	DIN 5482	ER-25A	1-16	41	55	108	70	72	40	1:2	D01013	...000801

*no VDI standard

© WTO GmbH • Subject to change without notice.

ООО "ПРОВЕРТ" www.prowert.ru info@prowert.ru +7 (495) 108-05-38

Right angle back set drill/milling unit - for ER style collet

Please select suitable turret specification from the Machine Type listing!
Typ A: Face mounted
Typ B: O. D. mounted
Ratio = 1:1

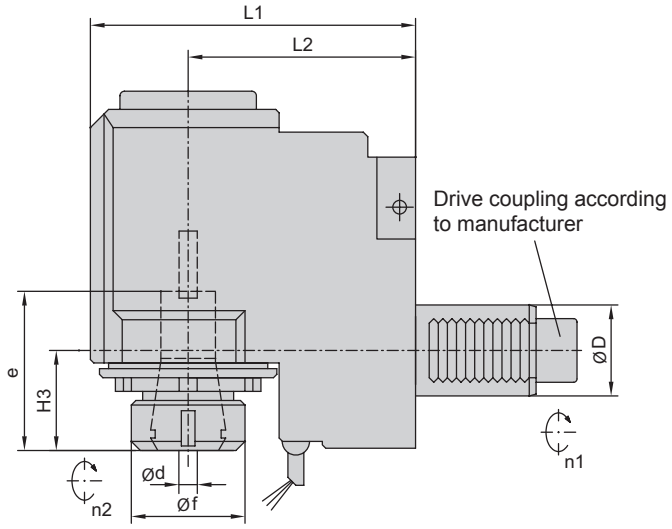

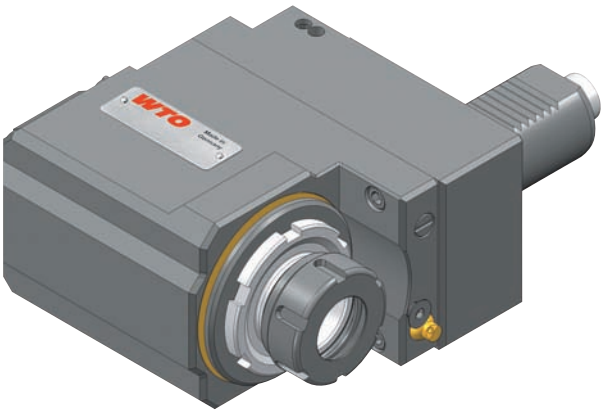

4105... (EC) with external coolant supply

Order wrenches separately!

Item No.	Turret specification				Clamping System				Dimensions / Data						Wrench
	ØD	Turret manufacturer	Type	Drive coupling	Size	Ød	e	Øf	L1	L2	H3	M Nm	Ratio n1:n2		00675...
410510007-16	16	Sauter	A	DIN 5480	ER-16	.5-10	39	28	71	51	26	6	1:1		...000919
410513000-20	20	Duplomatic	A	DIN 1809	ER-20	1-13	42	34	82	59	26	15	1:1		...000371
410513011-20	20	Sauter[1)]	A	DIN 5480	ER-20	1-13	42	34	82	59	26	15	1:1		...000371
410516006-25	25	Emco 332	B	DIN 5480	ER-25A	1-16	45	40	104	75	20	20	1:1		...000907
410516014-25	25	Sauter	B	DIN 5480	ER-25A	1-16	48	55	109	75	14	20	1:1		...000801
410516041-30	30	Baruffaldi	A	TBMA 160	ER-25A	1-16	48	55	119	85	14	32	1:1		...000801
410516202-30	30	Baruffaldi[4)]	B	TBMR 160	ER-25	1-16	52	42	140	110	42	32	1:1		...000359
410516071-30	30	Duplomatic	A	DIN 1809	ER-25A	1-16	48	55	119	85	14	32	1:1		...000801
410516133-30	30	Sauter	A	DIN 5480	ER-25A	1-16	48	55	119	85	14	32	1:1		...000801
410516193-30	30	Sauter (L2=85)[4)]	B	DIN 5480	ER-25	1-16	52	42	115	85	42	32	1:1		...000359
410516200-30	30	Sauter (L2=100)[4)]	B	DIN 5480	ER-25	1-16	52	42	130	100	42	32	1:1		...000359
410516005-30	30	Sauter	A	DIN 5482	ER-25A	1-16	48	55	119	85	14	32	1:1		...000801
410520008-40	40	Baruffaldi	A	TBMA 200	ER-32	2-20	60	50	124	90	40	40	1:1		...000592
410520351-40	40	Baruffaldi[3)]	B	TBMR 200	ER-32	2-20	60	50	139	100	50	63	1:1		...000592
410520029-40	40	Duplomatic	A	DIN 1809	ER-32	2-20	60	50	124	90	40	40	1:1		...000592
410520098-40	40	Emag[2)3)]	B	DIN 1809	ER-32	2-20	60	50	114	75	50	63	1:1		...000592
410520256-40	40	Haas (L=104.85)	A	1-step	ER-32	2-20	70	50	143	100	44	63	1:1		...000743
410520293-40	40	Haas (L=117.55)	A	1-step	ER-32	2-20	70	50	143	100	44	63	1:1		...000743
410520335-40	40	Haas (L=130.25)	A	1-step	ER-32	2-20	70	50	143	100	44	63	1:1		...000743
410520242-40	40*	Mazak QTN-100MS[4)]	B	DIN 1809	ER-32	2-20	60	50	139	100	50	63	1:1		...000592
410520243-40	40*	Mazak QTN-200MS[4)]	B	DIN 1809	ER-32	2-20	60	50	169	130	50	63	1:1		...000592
410520028-40	40	Okuma LB 300-M	A	1-step	ER-32	2-20	70	50	143	100	44	63	1:1		...000743
410520220-40	40	Sauter	A	DIN 5480	ER-32	2-20	70	50	143	100	44	63	1:1		...000743
410520269-40	40	Sauter (L2=100)[4)]	B	DIN 5480	ER-32	2-20	60	50	139	100	50	63	1:1		...000592
410520267-40	40	Sauter (L2=120)[4)]	B	DIN 5480	ER-32	2-20	60	50	159	120	50	63	1:1		...000592
410520002-40	40	Sauter	A	DIN 5482	ER-32	2-20	70	50	143	100	44	63	1:1		...000743
410526021-40	40	Sauter	A	DIN 5482	ER-40	3-26	75	63	143	100	47	63	1:1		...000744
410526043-50	50	Baruffaldi	A	TBMA 250	ER-40	3-26	75	63	153	110	47	80	1:1		...000744
410526015-50	50	Duplomatic	A	DIN 1809	ER-40	3-26	75	63	153	110	47	80	1:1		...000744
410526014-50	50	Okuma LU 35-M	A	1-step	ER-40	3-26	75	63	153	110	47	80	1:1		...000744
410534000-50	50	Okuma LU 35-M	A	1-step	ER-50	10-34	95	78	179	124	83	100	1:1		...000380
410526055-50	50	Sauter	A	DIN 5480	ER-40	3-26	75	63	153	110	47	80	1:1		...000744
410526002-50	50	Sauter	A	DIN 5482	ER-40	3-26	75	63	153	110	47	80	1:1		...000744
410534019-60	60	Baruffaldi	A	TBMA 320	ER-50	10-34	95	78	179	124	83	100	1:1		...000380
410534005-60	60	Duplomatic	A	DIN 1809	ER-50	10-34	95	78	179	124	83	100	1:1		...000380
410534000-60	60	Okuma LU 45-M	A	1-step	ER-50	10-34	95	78	179	124	83	100	1:1		...000380
410534003-60	60	Sauter	A	DIN 5482	ER-50	10-34	95	78	179	124	83	100	1:1		...000380

*no VDI standard
1) Drive coupling W11x0,8 / DIN 5480 2) 180° reversible head 3) direction of rotation: n1 ≠ n2
4) for sub spindle, 180° reversible head, direction of rotation: n1 ≠ n2

© WTO GmbH • Subject to change without notice.
ООО "ПРОВЕРТ" www.prowert.ru info@prowert.ru +7 (495) 108-05-38

Right angle back set drill/milling unit - for ER style collet - HIGH PRESSURE -

Please select suitable turret specification from the Machine Type listing!
Typ A: Face mounted
Typ B: O. D. mounted
Ratio = 1:1
Max. coolant pressure = 1160 PSI (80 bar)

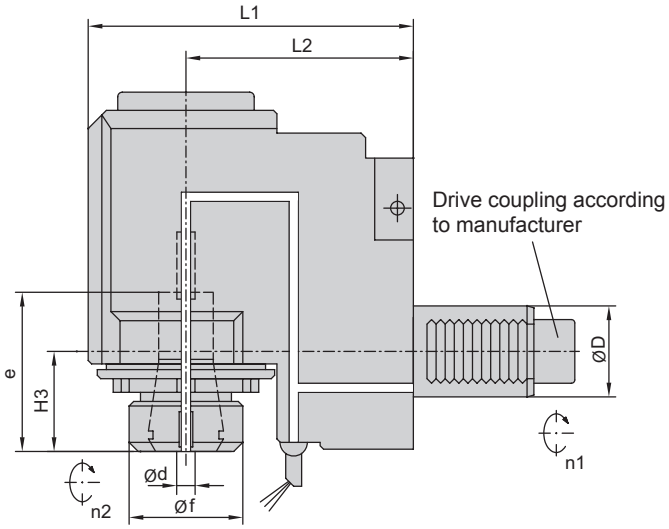

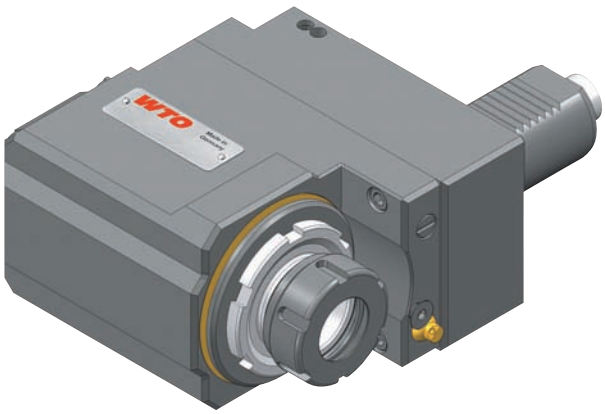

4105... (IC - HP) with internal + external coolant supply

Order wrenches separately!

Item No.	Turret specification				Clamping System				Dimensions / Data					Coolant	Wrench
	ØD	Turret manufacturer	Type	Drive coupling	Size	Ød	e	Øf	L1	L2	H3	M Nm	Ratio n1:n2	Pressure diagram	00675...
410513001-20	20	Duplomatic[5]	A	DIN 1809	ER-20	1-13	42	34	82	59	26	15	1:1	D01002	...000371
410513012-20	20	Sauter[1)5)]	A	DIN 5480	ER-20	1-13	42	34	82	59	26	15	1:1	D01002	...000371
410516010-25	25	Emco 332	B	DIN 5480	ER-25A	1-16	45	40	104	75	20	20	1.1	D01013	...000907
410516015-25	25	Sauter	B	DIN 5480	ER-25A	1-16	48	55	109	75	14	20	1:1	D01013	...000801
410516108-30	30	Baruffaldi	A	TBMA 160	ER-25A	1-16	48	55	119	85	14	32	1:1	D01013	...000801
410516203-30	30	Baruffaldi[4]	B	TBMR 160	ER-25	1-16	52	42	140	110	42	32	1:1	D01013	...000359
410516109-30	30	Duplomatic	A	DIN 1809	ER-25A	1-16	48	55	119	85	14	32	1:1	D01013	...000801
410516135-30	30	Sauter	A	DIN 5480	ER-25A	1-16	48	55	119	85	14	32	1:1	D01013	...000801
410516199-30	30	Sauter (L2=85)[4]	B	DIN 5480	ER-25	1-16	52	42	115	85	42	32	1:1	D01013	...000359
410516201-30	30	Sauter (L2=100)[4]	B	DIN 5480	ER-25	1-16	52	42	130	100	42	32	1:1	D01013	...000359
410516111-30	30	Sauter	A	DIN 5482	ER-25A	1-16	48	55	119	85	14	32	1:1	D01013	...000801
410520150-40	40	Baruffaldi	A	TBMA 200	ER-32	2-20	60	50	124	90	40	40	1:1	D01013	...000592
410520352-40	40	Baruffaldi[4]	B	TBMR 200	ER-32	2-20	60	50	139	100	50	63	1:1	D01013	...000592
410520151-40	40	Duplomatic	A	DIN 1809	ER-32	2-20	60	50	124	90	40	40	1:1	D01013	...000592
410520099-40	40	Emag[2)3)]	B	DIN 1809	ER-32	2-20	60	50	114	75	50	63	1:1	D01013	...000592
410520257-40	40	Haas (L=104.85)	A	1-step	ER-32	2-20	70	50	143	100	44	63	1:1	D01013	...000743
410520294-40	40	Haas (L=117.55)	A	1-step	ER-32	2-20	70	50	143	100	44	63	1:1	D01013	...000743
410520336-40	40	Haas (L=130.25)	A	1-step	ER-32	2-20	70	50	143	100	44	63	1:1	D01013	...000743
410520246-40	40*	Mazak QTN-100MS[4]	B	DIN 1809	ER-32	2-20	60	50	139	100	50	63	1:1	D01013	...000592
410520247-40	40*	Mazak QTN-200MS[4]	B	DIN 1809	ER-32	2-20	60	50	169	130	50	63	1:1	D01013	...000592
410520152-40	40	Okuma LB 300-M	A	1-step	ER-32	2-20	70	50	143	100	44	63	1:1	D01013	...000743
410520222-40	40	Sauter	A	DIN 5480	ER-32	2-20	70	50	143	100	44	63	1:1	D01013	...000743
410520270-40	40	Sauter (L2=100)[4]	B	DIN 5480	ER-32	2-20	60	50	139	100	50	63	1:1	D01013	...000592
410520268-40	40	Sauter (L2=120)[4]	B	DIN 5480	ER-32	2-20	60	50	159	120	50	63	1:1	D01013	...000592
410520154-40	40	Sauter	A	DIN 5482	ER-32	2-20	70	50	143	100	44	63	1:1	D01013	...000743
410526027-40	40	Sauter	A	DIN 5482	ER-40	3-26	75	63	143	100	47	63	1:1	D01013	...000744
410526045-50	50	Baruffaldi	A	TBMA 250	ER-40	3-26	75	63	153	110	47	80	1:1	D01013	...000744
410526046-50	50	Duplomatic	A	DIN 1809	ER-40	3-26	75	63	153	110	47	80	1:1	D01013	...000744
410526048-50	50	Okuma LU 35-M	A	1-step	ER-40	3-26	75	63	153	110	47	80	1:1	D01013	...000744
410534001-50	50	Okuma LU 35-M	A	1-step	ER-50	10-34	95	78	179	124	83	100	1:1	D01012	...000380
410526057-50	50	Sauter	A	DIN 5480	ER-40	3-26	75	63	153	110	47	80	1:1	D01013	...000744
410526049-50	50	Sauter	A	DIN 5482	ER-40	3-26	75	63	153	110	47	80	1:1	D01013	...000744
410534020-60	60	Baruffaldi	A	TBMA 320	ER-50	10-34	95	78	179	124	83	100	1:1	D01012	...000380
410534004-60	60	Duplomatic	A	DIN 1809	ER-50	10-34	95	78	179	124	83	100	1:1	D01012	...000380
410534001-60	60	Okuma LU 45-M	A	1-step	ER-50	10-34	95	78	179	124	83	100	1:1	D01012	...000380
410534002-60	60	Sauter	A	DIN 5482	ER-50	10-34	95	78	179	124	83	100	1:1	D01012	...000380

*no VDI standard

1) Drive coupling W11x0,8 / DIN 5480 2) 180° reversible head 3) direction of rotation: n1 ≠ n2
4) for sub spindle, 180° reversible head, direction of rotation: n1 ≠ n2 5) max. coolant pressure = 435 PSI (30 bar)

© WTO GmbH • Subject to change without notice.

ООО "ПРОВЕРТ" www.prowert.ru info@prowert.ru +7 (495) 108-05-38

Right angle back set drill/milling unit - for ER style collet
- Torque increaser -

Please select suitable turret specification from the Machine Type listing!
Typ A: Face mounted
Typ B: O. D. mounted
Ratio = 2:1 (speed reduction)

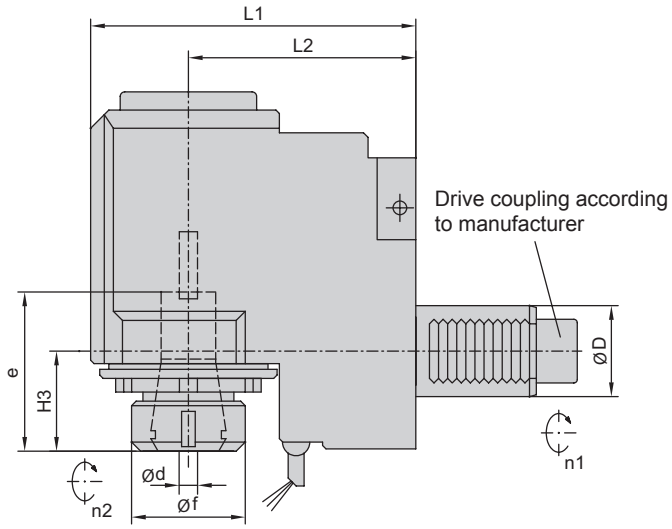

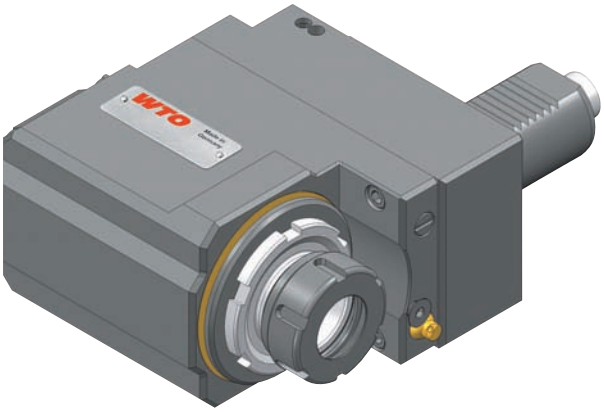

4105... (EC) with external coolant supply

Order wrenches separately!

Item No.	Turret specification				Clamping System				Dimensions / Data						Wrench
	ØD	Turret manufacturer	Type	Drive coupling	Size	Ød	e	Øf	L1	L2	H3	M Nm	Ratio n1:n2		00675...
410516017-25	25	Sauter	B	DIN 5480	ER-25A	1-16	48	55	109	75	14	40	2:1		...000801
410516104-30	30	Baruffaldi	A	TBMA 160	ER-25A	1-16	48	55	119	85	14	50	2:1		...000801
410516105-30	30	Duplomatic	A	DIN 1809	ER-25A	1-16	48	55	119	85	14	50	2:1		...000801
410516136-30	30	Sauter	A	DIN 5480	ER-25A	1-16	48	55	119	85	14	50	2:1		...000801
410516178-30	30	Sauter (L2=100)[1)]	B	DIN 5480	ER-25A	1-16	48	55	134	100	14	50	2:1		...000801
410516029-30	30	Sauter	A	DIN 5482	ER-25A	1-16	48	55	119	85	14	50	2:1		...000801
410520143-40	40	Baruffaldi	A	TBMA 200	ER-32	2-20	70	50	143	100	44	80	2:1		...000743
410520144-40	40	Duplomatic	A	DIN 1809	ER-32	2-20	70	50	143	100	44	80	2:1		...000743
410520145-40	40	Okuma LB 300-M	A	1-step	ER-32	2-20	70	50	143	100	44	80	2:1		...000743
410520223-40	40	Sauter	A	DIN 5480	ER-32	2-20	70	50	143	100	44	80	2:1		...000743
410520271-40	40	Sauter (L2=100)	B	DIN 5480	ER-32	2-20	70	50	143	100	44	80	2:1		...000743
410520003-40	40	Sauter	A	DIN 5482	ER-32	2-20	70	50	143	100	44	80	2:1		...000743
410526024-40	40	Sauter	A	DIN 5482	ER-40	3-26	75	63	143	100	47	80	2:1		...000744
410534004-50	50	Baruffaldi	A	TBMA 250	ER-50	10-34	95	78	179	124	83	100	2:1		...000380
410534005-50	50	Duplomatic	A	DIN 1809	ER-50	10-34	95	78	179	124	83	100	2:1		...000380
410534007-50	50	Okuma LU 35-M	A	1-step	ER-50	10-34	95	78	179	124	83	100	2:1		...000380
410534008-50	50	Sauter	A	DIN 5482	ER-50	10-34	95	78	179	124	83	100	2:1		...000380
410534024-60	60	Baruffaldi	A	TBMA 320	ER-50	10-34	95	78	214	144	60	200	2:1		...000380
410534006-60	60	Duplomatic	A	DIN 1809	ER-50	10-34	95	78	214	144	60	200	2:1		...000380
410534007-60	60	Okuma LU 45-M	A	1-step	ER-50	10-34	95	78	214	144	60	200	2:1		...000380
410534008-60	60	Sauter	A	DIN 5482	ER-50	10-34	95	78	214	144	60	200	2:1		...000380

1) 180° reversible head

© WTO GmbH • Subject to change without notice.
ООО "ПРОВЕРТ" www.prowert.ru info@prowert.ru +7 (495) 108-05-38

Right angle back set drill/milling unit - for ER style collet - Torque increaser – HIGH PRESSURE

Please select suitable turret specification from the Machine Type listing!
Typ A: Face mounted
Typ B: O. D. mounted
Ratio = 2:1 (speed reduction)
Max. coolant pressure = 1160 PSI (80 bar)

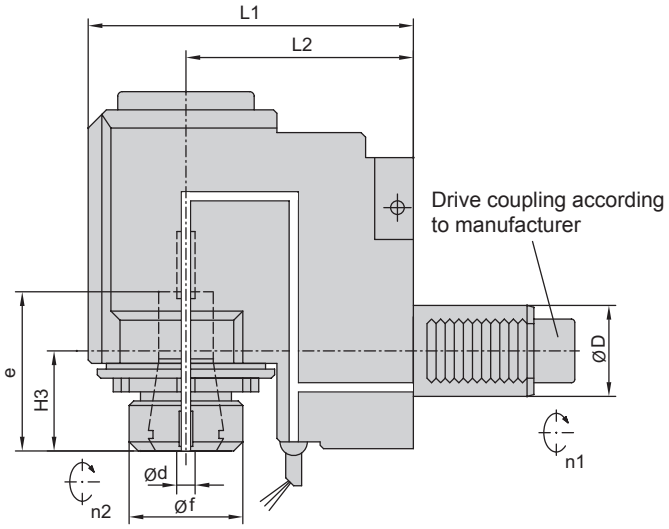

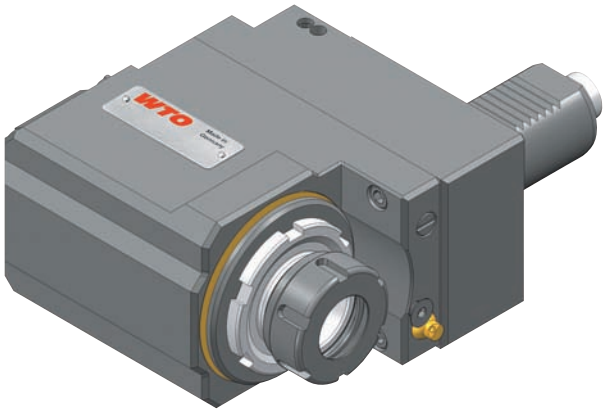

4105... (IC - HP) with internal + external coolant supply

Order wrenches separately!

Item No.	Turret specification				Clamping System				Dimensions / Data					Coolant	Wrench
	ØD	Turret manufacturer	Type	Drive coupling	Size	Ød	e	Øf	L1	L2	H3	M Nm	Ratio n1:n2	Pressure diagram	00675...
410516018-25	25	Sauter	B	DIN 5480	ER-25A	1-16	48	55	109	75	14	40	2:1	D01013	...000801
410516106-30	30	Baruffaldi	A	TBMA 160	ER-25A	1-16	48	55	119	85	14	50	2:1	D01013	...000801
410516107-30	30	Duplomatic	A	DIN 1809	ER-25A	1-16	48	55	119	85	14	50	2:1	D01013	...000801
410516137-30	30	Sauter	A	DIN 5480	ER-25A	1-16	48	55	119	85	14	50	2:1	D01013	...000801
410516179-30	30	Sauter (L2=100)[1]	B	DIN 5480	ER-25A	1-16	48	55	134	100	14	50	2:1	D01013	...000801
410516039-30	30	Sauter	A	DIN 5482	ER-25A	1-16	48	55	119	85	14	50	2:1	D01013	...000801
410520146-40	40	Baruffaldi	A	TBMA 200	ER-32	2-20	70	50	143	100	44	80	2:1	D01013	...000743
410520147-40	40	Duplomatic	A	DIN 1809	ER-32	2-20	70	50	143	100	44	80	2:1	D01013	...000743
410520148-40	40	Okuma LB 300-M	A	1-step	ER-32	2-20	70	50	143	100	44	80	2:1	D01013	...000743
410520224-40	40	Sauter	A	DIN 5480	ER-32	2-20	70	50	143	100	44	80	2:1	D01013	...000743
410520272-40	40	Sauter (L2=100)	B	DIN 5480	ER-32	2-20	70	50	143	100	44	80	2:1	D01013	...000743
410520149-40	40	Sauter	A	DIN 5482	ER-32	2-20	70	50	143	100	44	80	2:1	D01013	...000743
410526025-40	40	Sauter	A	DIN 5482	ER-40	3-26	75	63	143	100	47	80	2:1	D01013	...000744
410534009-50	50	Baruffaldi	A	TBMA 250	ER-50	10-34	95	78	179	124	83	100	2:1	D01012	...000380
410534010-50	50	Duplomatic	A	DIN 1809	ER-50	10-34	95	78	179	124	83	100	2:1	D01012	...000380
410534012-50	50	Okuma LU 35-M	A	1-step	ER-50	10-34	95	78	179	124	83	100	2:1	D01012	...000380
410534013-50	50	Sauter	A	DIN 5482	ER-50	10-34	95	78	179	124	83	100	2:1	D01012	...000380
410534025-60	60	Baruffaldi	A	TBMA 320	ER-50	10-34	95	78	214	144	60	200	2:1	D01012	...000380
410534009-60	60	Duplomatic	A	DIN 1809	ER-50	10-34	95	78	214	144	60	200	2:1	D01012	...000380
410534010-60	60	Okuma LU 45-M	A	1-step	ER-50	10-34	95	78	214	144	60	200	2:1	D01012	...000380
410534011-60	60	Sauter	A	DIN 5482	ER-50	10-34	95	78	214	144	60	200	2:1	D01012	...000380

1) 180° reversible head

© WTO GmbH • Subject to change without notice.

ООО "ПРОВЕРТ" www.prowert.ru info@prowert.ru +7 (495) 108-05-38

Right angle double spindle drill/milling unit - for ER style collet

Please select suitable turret specification from the Machine Type listing!
Typ A: Face mounted
Typ B: O. D. mounted
Ratio = 1:1 180° reversible head

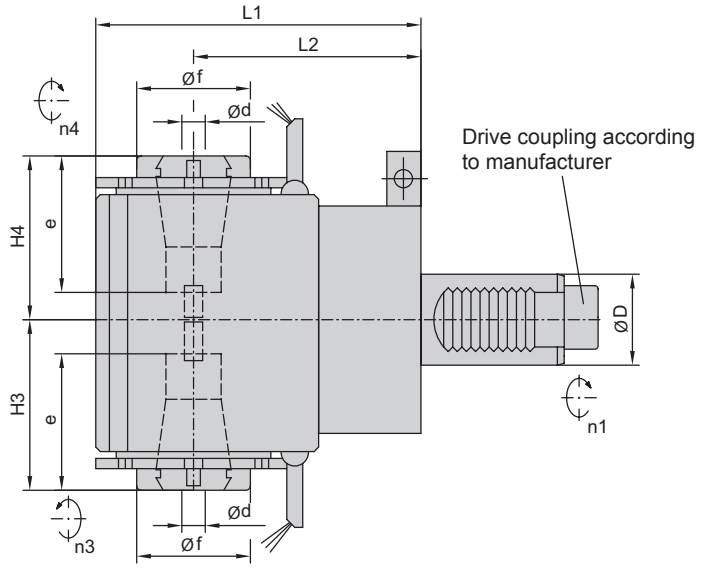

4105... (EC) with external coolant supply

Order wrenches separately!

Item No.	Revolver-Spezifikation				Clamping System				Dimensions / Data						Wrench
	ØD	Turret manufacturer	Type	Drive coupling	Size	Ød	e	Øf	L1	L2	H3 H4	M Nm	Ratio n1:n2		00675...
410516007-25	25	Emco 332[1)]	B	DIN 5480	ER-20 ER-25A	1-13 1-16	48 48	34 55	105	75	72 56	20	1:1		...000820
410516016-25	25	Sauter	B	DIN 5480	ER-25A ER-25A	1-16 1-16	48 48	55 64	109	75	65 55	20	1:1		...000801
410516198-30	30	Baruffaldi	B	TBMR 160	ER-25A ER-25A	1-16 1-16	48 48	55 64	144	110	65 55	32	1:1		...000801
410516079-30	30	Emco HT-665	B	DIN 5480	ER-25A ER-20	1-16 1-13	48 48	55 34	134	100	56 72	32	1:1		...000820
410516152-30	30	Okuma LT 200-M[1)]	B	1-step	ER-25A ER-25A	1-16 1-16	48 48	64 55	124	90	55 65	32	1:1		...000801
410516063-30	30	Sauter (L2=85)	B	DIN 5480	ER-25A ER-25A	1-16 1-16	48 48	55 64	119	85	65 55	32	1:1		...000801
410516034-30	30	Sauter (L2=100)	B	DIN 5480	ER-25A ER-25A	1-16 1-16	48 48	55 64	134	100	65 55	32	1:1		...000801
410520348-40	40	Baruffaldi[1)]	B	TBMR 200	ER-32A ER-32A	2-20 2-20	60 60	78 74	139	100	68 78	63	1:1		...000903
410520197-40	40	Emco HT-690	B	DIN 5480	ER-32 ER-32	2-20 2-20	70 70	50 50	138	100	94 90	63	1:1		...000743
410520237-40	40*	Mazak QTN-100MS	B	DIN 1809	ER-32A ER-32A	2-20 2-20	60 60	74 78	139	100	78 68	63	1:1		...000903
410520238-40	40*	Mazak QTN-200MS	B	DIN 1809	ER-32A ER-32A	2-20 2-20	60 60	74 78	169	130	78 68	63	1:1		...000903
410520230-40	40	Okuma LT 300-M[1)]	B	1-step	ER-32A ER-32A	2-20 2-20	60 60	78 74	129	90	68 78	63	1:1		...000903
410520233-40	40	Sauter (L2=100)[1)]	B	DIN 5480	ER-32A ER-32A	2-20 2-20	60 60	78 74	139	100	68 78	63	1:1		...000903
410520234-40	40	Sauter (L2=120)	B	DIN 5480	ER-32A ER-32A	2-20 2-20	60 60	74 78	159	120	78 68	63	1:1		...000903
410526077-50	50	Baruffaldi	B	TBMR 250	ER-40 ER-40	3-26 3-26	75 75	63 63	149	110	107 98	80	1:1		...000744
410526080-50	50	Sauter	B	DIN 5480	ER-40 ER-40	3-26 3-26	75 75	63 63	149	110	107 98	80	1:1		...000744

*no VDI standard
1) direction of rotation: n1 = n3, n1 ≠ n4

© WTO GmbH • Subject to change without notice.
ООО "ПРОВЕРТ" www.prowert.ru info@prowert.ru +7 (495) 108-05-38

Adjustable angle drill/milling unit - for ER style collet

Please select suitable turret specification from the Machine Type listing!
Typ A: Face mounted
Typ B: O. D. mounted
Adjustment: -92° to +92°
with vernier scale (0.1°)

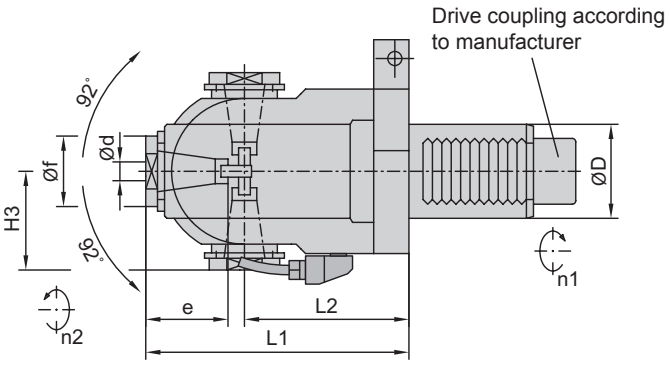

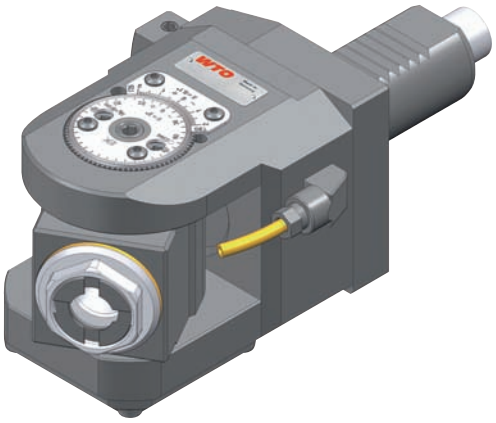

4110... (EC) with external coolant supply

Order wrenches separately!

Item No.	Turret specification				Clamping System				Dimensions / Data						Wrench
	ØD	Turret manufacturer	Type	Drive coupling	Size	Ød	e	Øf	L1	L2	H3	M Nm	Ratio n1:n2		00675...
411010003-25	25	Sauter	B	DIN 5480	ER-16A	.5-10	35	30	95	53	42	16	1:1		...000902
411010006-30	30	Baruffaldi	A B	TBMA 160 TBMR 160	ER-16A	.5-10	35	30	112	70	42	16	1:1		...000902
411010008-30	30	Duplomatic	A	DIN 1809	ER-16A	.5-10	35	30	112	70	42	16	1:1		...000902
411010010-30	30	Emco HT-665	B	DIN 5480	ER-16A	.5-10	35	30	102	60	42	16	1:1		...000902
411010001-30	30	Okuma LT 200-M	B	1-step	ER-16A	.5-10	35	30	112	70	42	16	1:1		...000902
411010003-30	30	Sauter	A	DIN 5480	ER-16A	.5-10	35	30	112	70	42	16	1:1		...000902
411010015-30	30	Sauter	B	DIN 5480	ER-16A	.5-10	35	30	102	60	42	16	1:1		...000902
411010017-30	30	Sauter	A	DIN 5482	ER-16A	.5-10	35	30	112	70	42	16	1:1		...000902
411016008-40	40	Baruffaldi	A B	TBMA 200 TBMR 200	ER-25A	1-16	48	41	130	70	60	20	1:1		...000934
411016009-40	40	Duplomatic	A	DIN 1809	ER-25A	1-16	48	41	130	70	60	20	1:1		...000934
411016036-40	40	Emag	B	DIN 1809	ER-25A	1-16	48	41	135	75	60	20	1:1		...000934
411016013-40	40	Emco HT-690	B	DIN 5480	ER-25A	1-16	48	41	145	85	60	20	1:1		...000934
411010010-40	40*	Mazak MP-6100	B	DIN 1809	ER-16A	.5-10	35	30	127	85	42	16	1:1		...000902
411016005-40	40*	Mazak MP-6200	B	DIN 1809	ER-25A	1-16	48	41	145	85	60	20	1:1		...000934
411010005-40	40*	Mazak QTN-100M(S)	B	DIN 1809	ER-16A	.5-10	35	30	107	65	42	16	1:1		...000902
411013012-40	40*	Mazak QTN-200M(S)	B	DIN 1809	ER-20A	1-13	45	36	135	85	50	20	1:1		...000928
411016010-40	40	Okuma LB 300-M	A	1-step	ER-25A	1-16	48	41	130	70	60	20	1:1		...000934
411013015-40	40	Okuma LT 300-M	B	1-step	ER-20A	1-13	45	36	120	70	50	20	1:1		...000928
411013019-40	40	Sauter (L2=100)	A,B	DIN 5480	ER-20A	1-13	45	36	120	70	50	20	1:1		...000928
411013018-40	40	Sauter (L2=120)	B	DIN 5480	ER-20A	1-13	45	36	135	85	50	20	1:1		...000928
411016006-40	40	Sauter	A,B	DIN 5480	ER-25A	1-16	48	41	130	70	60	20	1:1		...000934
411016000-40	40	Sauter	A	DIN 5482	ER-25A	1-16	48	41	130	70	60	20	1:1		...000934
411016008-50	50	Baruffaldi	A B	TBMA 250 TBMR 250	ER-25A	1-16	48	41	130	70	60	20	1:1		...000934
411020004-50	50	Baruffaldi	A	TBMA 250	ER-32	2-20	60	50	210	113	97	40	1.1:1		...000093
411020002-50	50	Duplomatic	A	DIN 1809	ER-32	2-20	60	50	210	113	97	40	1.1:1		...000093
411016005-50	50	Emag	B	DIN 1809	ER-25A	1-16	48	41	150	90	60	20	1:1		...000934
411020006-50	50	Okuma LU 35-M	A	1-step	ER-32	2-20	60	50	210	113	97	40	1.1:1		...000093
411016010-50	50	Sauter	A,B	DIN 5480	ER-25A	1-16	48	41	130	70	60	20	1:1		...000934
411020008-50	50	Sauter	A,B	DIN 5480	ER-32	2-20	60	50	210	113	97	40	1.1:1		...000093
411020000-50	50	Sauter	A	DIN 5482	ER-32	2-20	60	50	210	113	97	40	1.1:1		...000093
411026003-60	60	Baruffaldi	A	TBMA 320	ER-40	3-26	73	63	290	145	145	85	1:1		...000124
411026002-60	60	Duplomatic	A	DIN 1809	ER-40	3-26	73	63	290	145	145	85	1:1		...000124
411026000-60	60	Okuma LU 45-M	A	1-step	ER-40	3-26	73	63	290	145	145	85	1:1		...000124
411026001-60	60	Sauter	A	DIN 5482	ER-40	3-26	73	63	290	145	145	85	1:1		...000124

*no VDI standard

© WTO GmbH • Subject to change without notice.

ООО "ПРОВЕРТ" www.prowert.ru info@prowert.ru +7 (495) 108-05-38

Slitting saw unit
- interchangeable milling arbor -

Please select suitable turret specification from the Machine Type listing!
Typ A: Face mounted
Typ B: O. D. mounted
Ratio = Torque increase (speed reduction)
Do not exceed torque limit specified!

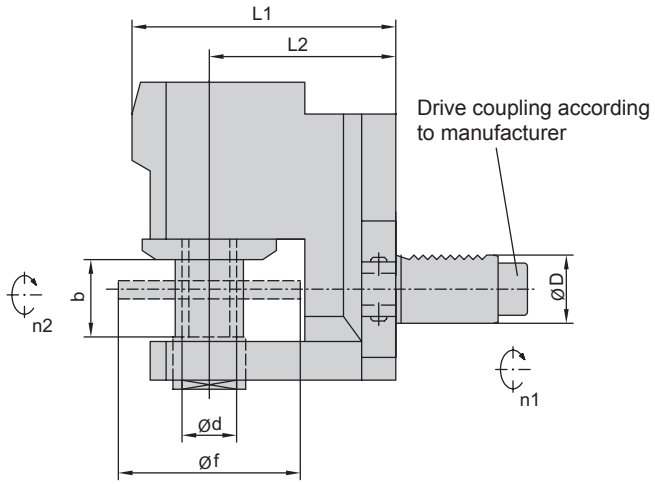

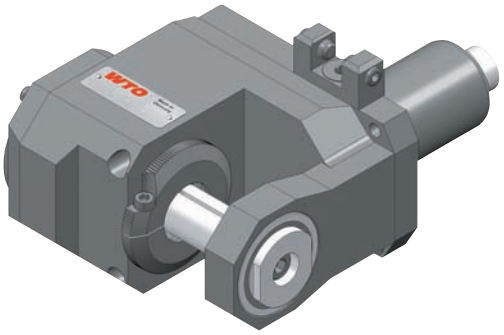

4109... (EC) with external coolant supply

Order milling arbor and wrenches separately!

Item No.	Turret specification				interchangeable milling arbor				Dimensions / Data					Wrench
	ØD	Turret manufacturer	Type	Drive coupling	Type	Ød	Ødf	b	L1	L2		M Nm	Ratio n1:n2	00675...
410900000-25	25	Index G200[1)]	B	1-step	14-2	16, 22, 27	80	34	116	82		40	2:1	...000460
410900005-25	25	Sauter	B	DIN 5480	14-2	16, 22, 27	80	34	117	83		40	2:1	...000460
410900020-30	30	Baruffaldi	B	TBMR 160	14-2	16, 22, 27	80	34	138	104		40	2:1	...000460
410900010-30	30	Emco HT-665	B	DIN 5480	14-2	16, 22, 27	80	34	148	114		40	2:1	...000460
410900014-30	30	Index G300	B	1-step	14-2	16, 22, 27	80	34	138	104		40	2:1	...000460
410900009-30	30	Okuma LT 200-M	B	1-step	14-2	16, 22, 27	80	34	116	82		40	2:1	...000460
410900015-30	30	Sauter (L2=85)	B	DIN 5480	14-2	16, 22, 27	80	34	116	82		40	2:1	...000460
410900008-30	30	Sauter (L2=100)	B	DIN 5480	14-2	16, 22, 27	80	34	138	104		40	2:1	...000460
410900021-40	40	Baruffaldi	B	TBMR 200	14-2	16, 22, 27	80	34	136	102		40	2:1	...000460
410900015-40	40	Emco HT-690	B	DIN 5480	14-2	16, 22, 27	80	34	136	102		40	2:1	...000460
410900022-40	40	Index G250	B	1-step	14-2	16, 22, 27	80	34	124	90		40	2:1	...000460
410900023-40	40	Index G400	B	1-step	14-2	16, 22, 27	80	34	124	90		40	2:1	...000460
410900009-40	40	Index V300	B	1-step	14-2	16, 22, 27	80	34	136	102		40	2:1	...000460
410900024-40	40*	Mazak QTN-100M(S)	B	DIN 1809	14-2	16, 22, 27	80	34	124	90		40	2:1	...000460
410900010-40	40*	Mazak QTN-200M(S)	B	DIN 1809	14-2	16, 22, 27	80	34	160	126		40	2:1	...000460
410900011-40	40	Okuma LT 300-M	B	1-step	14-2	16, 22, 27	80	34	124	90		40	2:1	...000460
410900013-40	40	Sauter	B	DIN 5480	14-2	16, 22, 27	80	34	136	102		40	2:1	...000460

*no VDI standard
1) only turret 1 and turret Y-B

© WTO GmbH • Subject to change without notice.
ООО "ПРОВЕРТ" www.prowert.ru info@prowert.ru +7 (495) 108-05-38

Offset slitting saw unit
- interchangeable milling arbor -

Please select suitable turret specification from the Machine Type listing!
Typ A: Face mounted
Typ B: O. D. mounted
Ratio = Torque increase (speed reduction) 180° reversible head
Do not exceed torque limit specified!

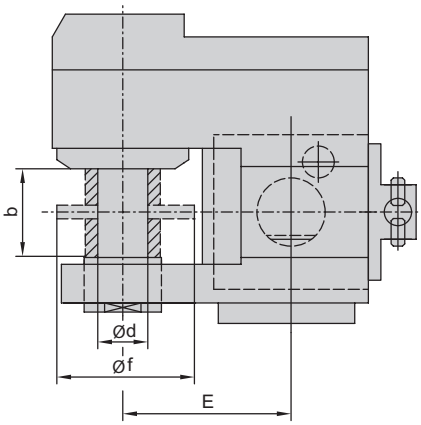

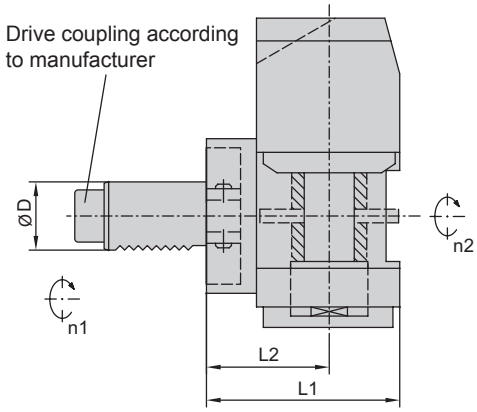

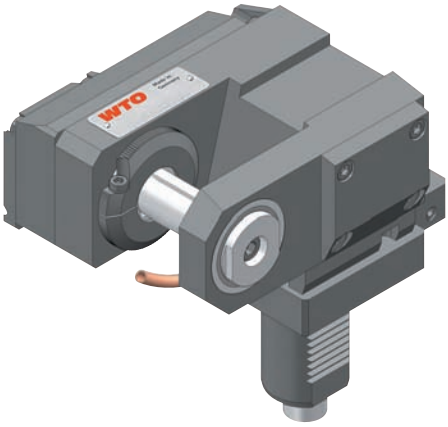

4115... (EC) with external coolant supply

Order milling arbor and wrenches separately!

Item No.	Turret specification				interchangeable milling arbor				Dimensions / Data					Wrench
	ØD	Turret manufacturer	Type	Drive coupling	Type	Ød	Ødf	b	L1	L2	E	M Nm	Ratio n1:n2	00675...
411500001-20	20	Duplomatic[2)]	A	DIN 1809	8-4	10, 13, 16	63	30	75	55	49	12	1.8:1	...000326
411500002-20	20	Sauter[1)2)]	A	DIN 5480	8-4	10, 13, 16	63	30	83	63	49	12	1.8:1	...000326
411500003-25	25	Emco 332[2)]	B	DIN 5480	8-4	10, 13, 16	63	30	91	71	49	12	1:1	...000326
411500002-25	25	Sauter	B	DIN 5480	14-2	16, 22, 27	80	40	104	72	76	50	2.7:1	...000460
411500006-25	25	Traub TNC 42[2)]	B	bevel gear	14-2	16, 22	63	40	84	53	62	40	2:1	...000460
411500015-30	30	Baruffaldi	A	TBMA 160	14-2	16, 22, 27	80	40	104	72	76	50	2.7:1	...000460
411500005-30	30	Duplomatic[2)]	A	DIN 1809	8-4	10, 13, 16	63	30	87	67	49	12	1.8:1	...000326
411500012-30	30	Duplomatic	A	DIN 1809	14-2	16, 22, 27	80	40	104	72	76	50	2.7:1	...000460
411500011-30	30	Sauter	A	DIN 5480	14-2	16, 22, 27	80	40	104	72	76	50	2.7:1	...000460
411500007-30	30	Sauter	A	DIN 5482	14-2	16, 22, 27	80	40	104	72	76	50	2.7:1	...000460
411500008-30	30	Sauter (L2=85)	B	DIN 5480	14-2	16, 22, 27	80	40	114	82	76	50	2.7:1	...000460
411500002-30	30	Traub TNC 65	B	bevel gear	14-2	16, 22, 27	80	40	94	62	76	50	2.7:1	...000460
411500021-40	40	Baruffaldi	A	TBMA 200	14-2	16, 22, 27	80	40	102	70	76	50	2.7:1	...000460
411500011-40	40	Duplomatic	A	DIN 1809	14-2	16, 22, 27	80	40	102	70	76	50	2.7:1	...000460
411500010-40	40	Emag	B	DIN 1809	14-2	16, 22, 27	80	40	102	70	76	50	2.7:1	...000460
411500004-40	40*	Mazak MP-6100	B	DIN 1809	14-2	16, 22, 27	80	40	144	112	76	50	2.7:1	...000460
411500001-40	40*	Mazak MP-6200	B	DIN 1809	14-2	16, 22, 27	80	40	159	127	76	50	2.7:1	...000460
411500005-40	40*	Mazak QTN-100M(S)	B	DIN 1809	14-2	16, 22, 27	80	40	129	97	76	50	2.7:1	...000460
411500006-40	40	Okuma LB 300-M	A	1-step	14-2	16, 22, 27	80	40	102	70	76	50	2.7:1	...000460
411500009-40	40	Sauter	A	DIN 5480	14-2	16, 22, 27	80	40	102	70	76	50	2.7:1	...000460
411500008-40	40	Sauter	A	DIN 5482	14-2	16, 22, 27	80	40	102	70	76	50	2.7:1	...000460
411500011-50	50	Baruffaldi[2)]	A	TBMA 250	19-2	22, 27, 32, 40	125	52	141	99	100	140	3:1	...000259
411500006-50	50	Duplomatic[2)]	A	DIN 1809	19-2	22, 27, 32, 40	125	52	141	99	100	140	3:1	...000259
411500005-50	50	Emag[2)]	B	DIN 1809	19-2	22, 27, 32, 40	125	52	141	99	100	140	3:1	...000259
411500002-50	50	Okuma LU 35-M[2)]	A	1-step	19-2	22, 27, 32, 40	125	52	141	99	100	140	3:1	...000259
411500007-50	50	Sauter[2)]	A	DIN 5480	19-2	22, 27, 32, 40	125	52	141	99	100	140	3:1	...000259
411500004-50	50	Sauter[2)]	A	DIN 5482	19-2	22, 27, 32, 40	125	52	141	99	100	140	3:1	...000259
411500009-60	60	Baruffaldi[2)]	A	TBMA 320	19-2	22, 27, 32, 40	125	52	141	99	100	140	3:1	...000259
411500012-60	60	Duplomatic[2)]	A	DIN 1809	19-2	22, 27, 32, 40	125	52	141	99	100	140	3:1	...000259
411500002-60	60	Okuma LU 45-M[2)]	A	1-step	19-2	22, 27, 32, 40	125	52	141	99	100	140	3:1	...000259
411500003-60	60	Sauter[2)]	A	DIN 5482	19-2	22, 27, 32, 40	125	52	141	99	100	140	3:1	...000259

*no VDI standard
1) Drive coupling W11x0,8 / DIN 5480 2) direction of rotation: n1 ≠ n2

© WTO GmbH • Subject to change without notice.

ООО "ПРОВЕРТ" www.prowert.ru info@prowert.ru +7 (495) 108-05-38

Interchangeable milling arbor

With adjustment nut for cutter fine positioning (+/- 1mm):
Remove key for saw cutters without slot
Requires spacers to locate cutters

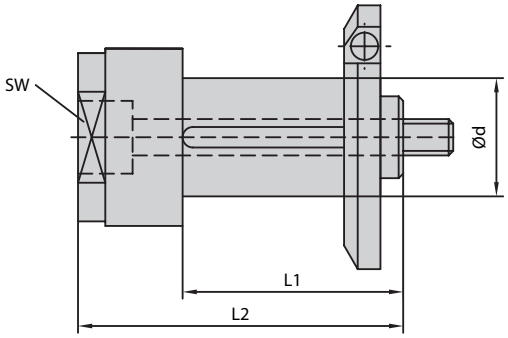

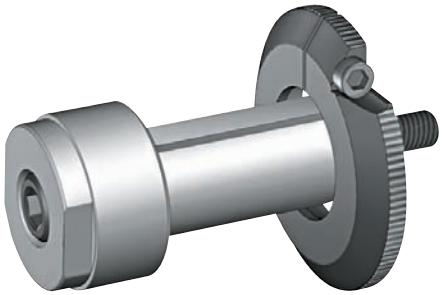

1600...

Item No.	Arbor	Clamping System					Dimensions			Remarks	
	Type	Ød					L1	L2	SW		
160010084	8-4	10					37	60	14		
160013084	8-4	13					37	60	14		
160016084	8-4	16					37	60	14		
160010142	14-2	10					56	79	30	Special - without key way	
160013142	14-2	13					56	79	30	Special - without key way	
160016142	14-2	16					56	79	30		
160022142	14-2	22					56	79	30		
160027142	14-2	27					56	79	30		
160022192	19-2	22					67	95	30	Without adjustment nut	
160027192	19-2	27					67	95	30	Without adjustment nut	
160032192	19-2	32					67	95	30	Without adjustment nut	
160040192	19-2	40					67	95	30	Without adjustment nut	
160012084	8-4	.5"					37	60	14		
160015084	8-4	.625“					37	60	14		
160015142	14-2	.625“					56	79	30		
160019142	14-2	.75“					56	79	30		
160023142	14-2	.875“					56	79	30		
160025142	14-2	1“					56	79	30		
160023192	19-2	.875“					67	95	30	Without adjustment nut	
160025192	19-2	1“					67	95	30	Without adjustment nut	
160031192	19-2	1.25“					67	95	30	Without adjustment nut	

© WTO GmbH • Subject to change without notice.
ООО "ПРОВЕРТ" www.prowert.ru info@prowert.ru +7 (495) 108-05-38

Tapping Collets, type ET-1, with tension

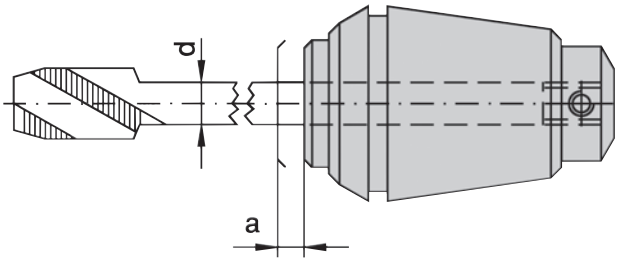

1800...

Item No.	Type	Size	Range	d Shank	a
180012…[d*10]	ET-1-12	ER-11	M1-M5	1.4/1.6/1.8/2.0/2.2/2.24/2.5/2.8/3/3.15/3.5/3.55	5.5
180016…[d*10]	ET-1-16	ER-16	M1-M8	1.4/1.6/1.8/2.0/2.2/2.24/2.5/2.8/3/3.15/3/3.5/3.55/4/4.5/5/5.5/6/6.2	7
180020…[d*10]	ET-1-20	ER-20	M1-M10	2.2/2.24/2.5/2.8/3/3.15/3/3.5/3.55/4/4.5/5/5.5/6/6.2/6.3/7	7
180025…[d*10]	ET-1-25	ER-25	M1-M10	2.5/2.8/3/3.15/3/3.5/3.55/4/4.5/5/5.5/6/6.2/6.3/7/7.10/8/8.5/9/10	8
180032…[d*10]	ET-1-32	ER-32	M4.5-M16	4.5/5/5.5/6/6.2/6.3/7/7.10/8/8.5/9/10/10.5/11/11.2/12/12.5	10
180040…[d*10]	ET-1-40	ER-40	M4.5-M22	6/6.2/6.3/7/7.10/8/8.5/9/10/10.5/11/11.2/12/12.5/14/15/16	13

ER Tapping Collets, type ER-GB, for rigid tapping

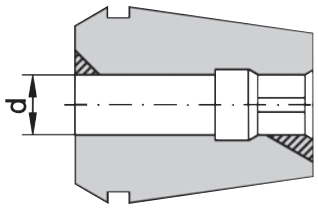

1810...

Item No.	Type	Size	Range	d Shank
181016…[d*10]	ER-16-GB	ER-16	M3.5-M9	4/4.5/5/5.5/6/6.2/6.3/7/7.1/8/8.5/9
181020…[d*10]	ER-20-GB	ER-20	M3.5-M14	4/4.5/5/5.5/6/6.2/6.3/7/7.1/8/8.5/9/10/10.5/11/11.2
181025…[d*10]	ER-25-GB	ER-25	M3.5-M22	4/4.5/5/5.5/6/6.2/6.3/7/7.1/8/8.5/9/10/10.5/11/11.2/12/12.5/14/15/16
181032…[d*10]	ER-32-GB	ER-32	M3.5-M27	4/4.5/5/5.5/6/6.2/6.3/7/7.1/8/8.5/9/10/10.5/11/11.2/12/12.5/14/15/16/17/18/20
181040…[d*10]	ER-40-GB	ER-40	M4.5-M30	6/6.2/6.3/7/7.1/8/8.5/9/10/10.5/11/11.2/12/12.5/14/15/16/17/18/20/22

© WTO GmbH • Subject to change without notice.

ООО "ПРОВЕРТ" www.prowert.ru info@prowert.ru +7 (495) 108-05-38

ER Collets, High Precision

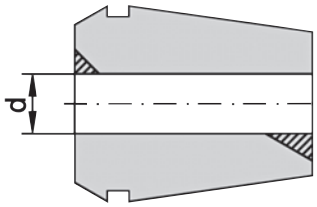

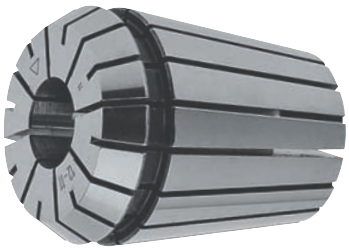

1900...

Item No. unit	Item No. complete set	Size	d	Range per collet	Run-out tolerance*	Order example
190011...[d*10]	**190011000**	ER-11	7-0.5	0.5	0.01	190011010 for shank dia. = 1-0.5
190016010		ER-16	1-0.5	0.5	0.01	
190016...[d*10]		ER-16	10-1	1	0.01	190016020 for shank dia. = 2-1
	190016000	ER-16	10-0.5	-	0.01	
190020...[d*10]	**190020000**	ER-20	13-1	1	0.01	190020020 for shank dia. = 2-1
190025...[d*10]	**190025000**	ER-25	16-1	1	0.01	190025020 for shank dia. = 2-1
190032...[d*10]	**190032000**	ER-32	20-2	1	0.01	190032030 for shank dia. = 3-2
190040...[d*10]	**190040000**	ER-40	26-3	1	0.01	190040040 for shank dia. = 4-3
190050...[d*10]	**190050000**	ER-50	34-10	2	0.015	190050120 for shank dia. = 12-10

*with test mandrel according DIN 6499 complete sets including wooden case

ER Collets (ER-UP), Ultra Precision

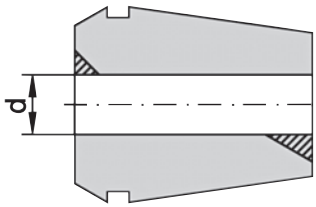

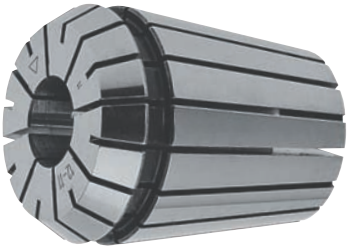

1901...

Item No. unit	Item No. complete set	Size	d	Range per collet	Run-out tolerance*	Order example
190111...[d*10]	**190111000**	ER-11	7-0.5	0.5	0.005	190111010 for shank dia. = 1-0.5
190116010		ER-16	1-0.5	0.5	0.005	
190116...[d*10]		ER-16	10-1	1	0.005	190116020 for shank dia. = 2-1
	190116000	ER-16	10-0.5	-	0.005	
190120...[d*10]	**190120000**	ER-20	13-1	1	0.005	190120020 for shank dia. = 2-1
190125...[d*10]	**190125000**	ER-25	16-1	1	0.005	190125020 for shank dia. = 2-1
190132...[d*10]	**190132000**	ER-32	20-2	1	0.005	190132030 for shank dia. = 3-2
190140...[d*10]	**190140000**	ER-40	26-3	1	0.005	190140040 for shank dia. = 4-3
190150...[d*10]	**190150000**	ER-50	34-10	2	0.01	190150120 for shank dia. = 12-10

*with test mandrel according DIN 6499 complete sets including wooden case

© WTO GmbH • Subject to change without notice.
ООО "ПРОВЕРТ" www.prowert.ru info@prowert.ru +7 (495) 108-05-38

ER Collets, High Precision
- Sealed, for internal coolant supply -

For cutting tools with cylindrical shank without flat
Only specified shank dia. to be clamped!
Max. coolant pressure = 1740 PSI (120 bar)

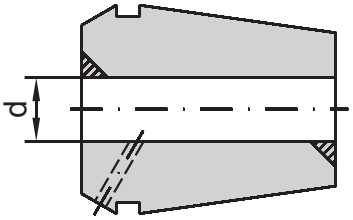

1910... (IC-HP)

Item No. unit	Item No. complete set	Size	d	Range per collet	Run-out tolerance*	Available shank dia.
191011...[d*10]		ER-11	3.0-7.0	h8	0.01	3.0/4.0/5.0/6.0/7.0
191011...[d*0.1]		ER-11	0.125-0.25“	h8	0.0004“	0.125“/0.188“/0.25“
191016...[d*10]		ER-16	3.0-10.0	h8	0.01	3.0/4.0/5.0/6.0/7.0/8.0/9.0/10.0
191016...[d*0.1]		ER-16	0.125-0.375“	h8	0.0004“	0.125“/0.188“/0.25“/0.313“/0.375“
	191016000	ER-16	4.0-10.0	h8	0.01	4.0/5.0/6.0/8.0/10.0
191020...[d*10]		ER-20	3.0-13.0	h8	0.01	3.0/4.0/5.0/6.0/7.0/8.0/9.0/10.0/11.0 /12.0/13.0
191020...[d*0.1]		ER-20	0.125-0.5“	h8	0.0004“	0.125“/0.188“/0.25“/0.313“/0.375“ /0.438“/0.5“
	191020000	ER-20	4.0-12.0	h8	0.01	4.0/6.0/8.0/10.0/12.0
191025...[d*10]		ER-25	3.0-16.0	h8	0.01	3.0/4.0/5.0/6.0/7.0/8.0/9.0/10.0/11.0 /12.0/13.0/14.0/15.0/16.0
191025...[d*0.1]		ER-25	0.125-0.625“	h8	0.0004“	0.125“/0.188“/0.25“/0.313“/0.375“ /0.438“/0.5“/0.563“/0.625“
	191025000	ER-25	4.0-16.0	h8	0.01	4.0/6.0/8.0/10.0/12.0/16.0
191032...[d*10]		ER-32	3.0-20.0	h8	0.01	3.0/4.0/5.0/6.0/7.0/8.0/9.0/10.0/11.0 /12.0/13.0/14.0/15.0/16.0/17.0//18.0 /19.0/20.0
191032...[d*0.1]		ER-32	0.125-0.75“	h8	0.0004“	0.125“/0.188“/0.25“/0.313“/0.375“ /0.438“/0.5“/0.563“/0.625“/0.75“
	191032000	ER-32	6.0-20.0	h8	0.01	6.0/8.0/10.0/12.0/16.0/20.0
191040...[d*10]		ER-40	4.0-26.0	h8	0.01	4.0/5.0/6.0/7.0/8.0/9.0/10.0/11.0 /12.0/13.0/14.0/15.0/16.0/17.0/18.0 /19.0/20.0/21.0/22.0/23.0/24.0/25.0 /26.0
191040...[d*0.1]		ER-40	0.25-1.0“	h8	0.0004“	0.25“/0.313“/0.375“//0.438“/0.5“ /0.563“/0.625“/0.75“/0.875“/1.0“

*with test mandrel according DIN 6499
complete sets including wooden case

© WTO GmbH • Subject to change without notice.

ООО "ПРОВЕРТ" www.prowert.ru info@prowert.ru +7 (495) 108-05-38

ER Collet nuts - with external thread - face clamping
- Short version -

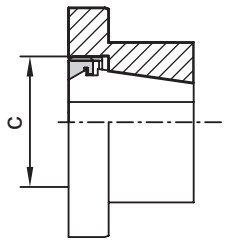

2001... Collet nut ER-AZ

Item No.	Size	c
200111000	ER-11A	M18x1
200116000	ER-16A	M24x1
200120000	ER-20A	M28x1.5
200125000	ER-25A	M32x1.5
200132000	ER-32A	M40x1.5
200140000	ER-40A	M50x1.5

1075... Wrench for ER-AZ

Item No.	Size
107511001	ER-11A
107516001	ER-16A
107520001	ER-20A
107525001	ER-25A
107532001	ER-32A
107540001	ER-40A

ER Collet nuts - with external thread - with hexagon

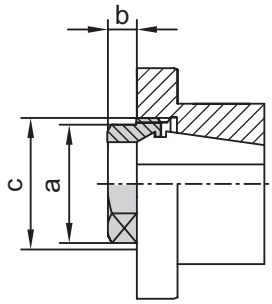

2002… Collet nut ER-AS

Item No.	Size	a	b	c
200211000	ER-11A	13	3	M18x1
200216000	ER-16A	19	4	M24x1
200220000	ER-20A	22	4.5	M28x1.5
200225000	ER-25A	27	5	M32x1.5
200232000	ER-32A	32	5	M40x1.5

1075… Wrench for ER-AS

Item No.	Size
107511002	ER-11A
107516002	ER-16A
107520002	ER-20A
107525002	ER-25A
107532002	ER-32A

© WTO GmbH • Subject to change without notice.
ООО "ПРОВЕРТ" www.prowert.ru info@prowert.ru +7 (495) 108-05-38

PRESSURE DIAGRAM

ISO 9001

WTO

Maximum possible coolant pressure depends on RPM.
Every sealing system has an individual diagram.
Select the suitable diagram by the number stated in the data sheet of the driven precision tool.

ATTENTION:
Do not run dry! Coolant must to be switched on before rotating.
For machining cast iron, only use driven tools with diagram D01012 or D01013.
1 bar = 14.5 PSI. Filteration of minimum 100 µm recommended

D01001

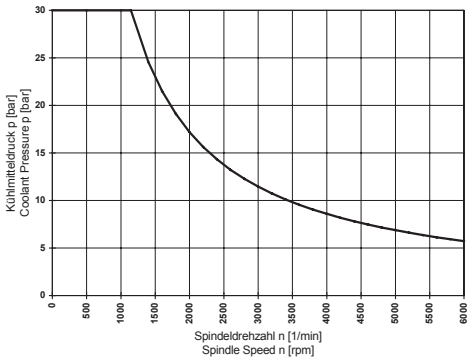

D01002

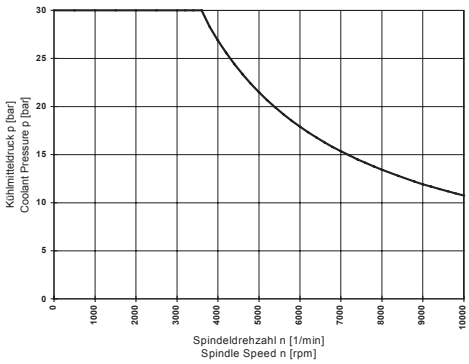

D01003

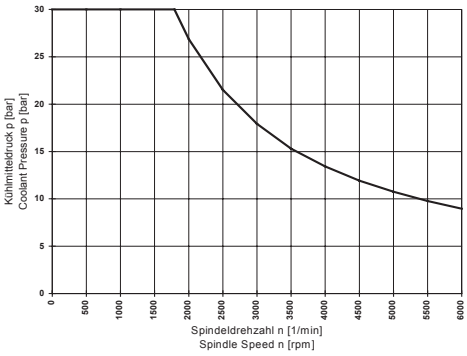

D01007

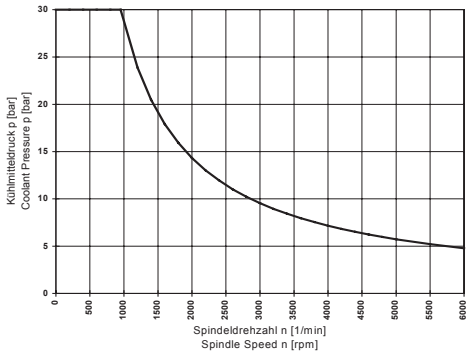

D01010

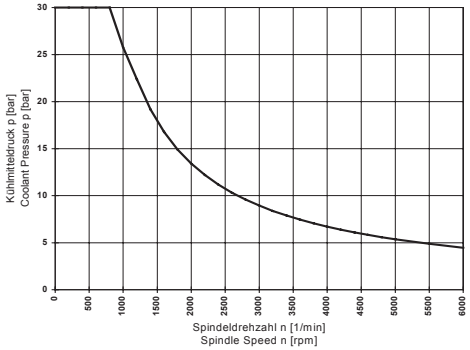

D01011

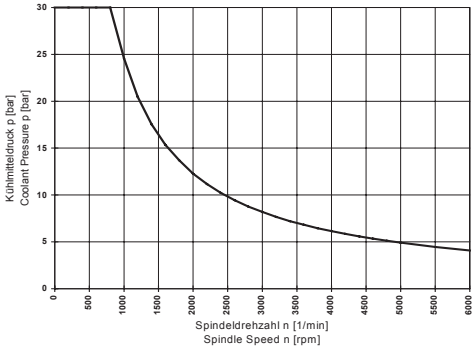

D01012

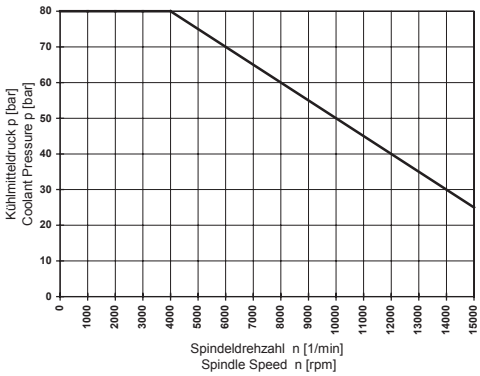

D01013

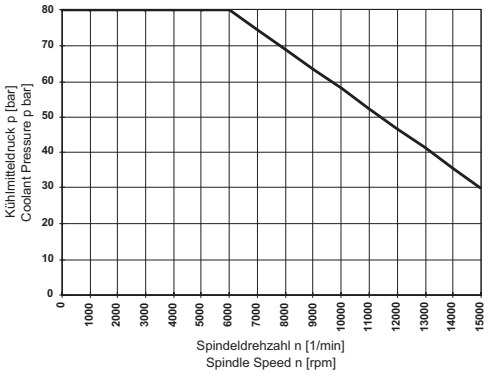

© WTO GmbH • Subject to change without notice.

ООО "ПРОВЕРТ" www.prowert.ru info@prowert.ru +7 (495) 108-05-38

Higher Productivity

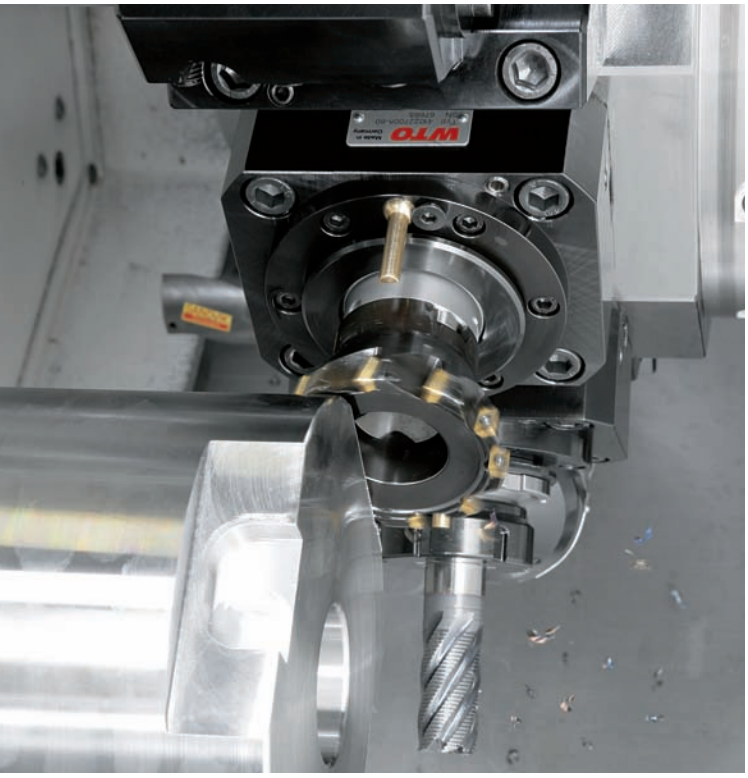

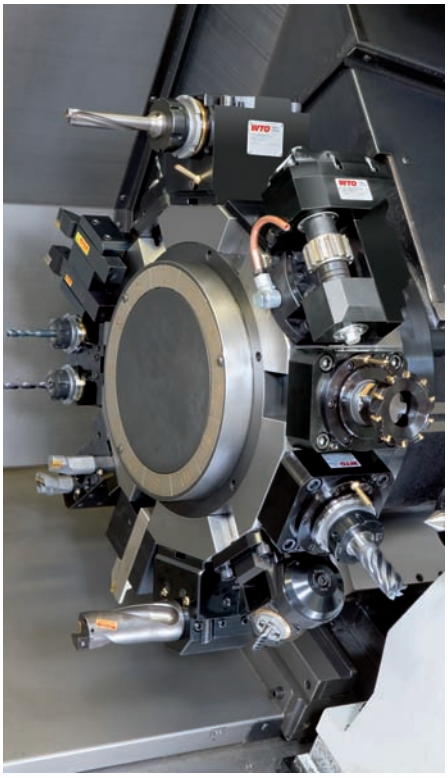

TÜV CERT

CERTIFICATE

The TÜV CERT Certification Body of TÜV Management Service GmbH
certifies in accordance with TÜV CERT procedures that

WTO-Werkzeug-Einrichtungen GmbH
Auf der oberen Au 45
D-77797 Ohlsbach

has established and applies a quality system for

Driven Precision Tools

An audit was performed, Report No. GM-M-00/006
Proof has been furnished that the requirements according to

DIN EN ISO 9001:1994

are fulfilled.

Certificate Registration No. 70 100 M 006

Mannheim, August 23

TÜV

WTO's strategy is to constantly build on excellence in technology and quality to serve our customers.

As recognized pioneer and leader in its industry, WTO has always set the benchmarks for driven tool technology with inventions and new developments.

Our products are used worldwide in the metal cutting industry where high precision parts are manufactured with efficiency

In 1994 WTO became the first manufacturer of driven precision tooling to achieve ISO 9001 certification.

WTO

Higher Productivity

Germany
WTO GmbH
Auf der oberen Au 45
77797 Ohlsbach
Phone: +49-78 03 93 92 - 0
Telefax: +49-78 03 93 92 - 40
www.wto.de

USA
WTO Inc.
14301-A South Lakes Drive
Charlotte NC 28273
Phone: +1 704.714.7765
Telefax: +1 704.714.7767
www.wto-usa.com

© WTO GmbH 12/2008/en

ООО "ПРОВЕРТ" www.prowert.ru info@prowert.ru +7 (495) 108-05-38